SCS208AM

SiC Schottky Barrier Diode

Datasheet

V_R	650V
I_F	8A
Q_C	13nC

●Outline

TO-220FM-2LGE

●Features

1) Shorter recovery time

2) Reduced temperature dependence

3) High-speed switching possible

●Inner circuit

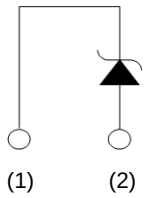

(1) Cathode
(2) Anode

●Applications

- PFC Boost Topology
- Secondary Side Rectification
- Data Center
- PV Power Conditioners

●Packaging specifications

Type	Packaging	Tube
	Reel size (mm)	-
	Tape width (mm)	-
	Basic ordering unit (pcs)	50
	Packing code	C7G
	Marking	SCS208AM

●Absolute maximum ratings (T_{vj} = 25°C unless otherwise specified)

Parameter		Symbol	Value	Unit
Reverse voltage (repetitive peak)		V_{RM}	650	V
Reverse voltage (DC)		V_R	650	V
Continuous forward current (T_c= 101°C)		I_F	8 *1	A
Surge non-repetitive forward current	PW=10ms sinusoidal, T_{vj}=25°C	I_{FSM}	30	A
	PW=10ms sinusoidal, T_{vj}=150°C		23	A
	PW=10μs square, T_{vj}=25°C		110	A
Repetitive peak forward current		I_{FRM}	25 *2	A
i^2t value	PW=10ms, T_{vj}=25°C	$\int i^2dt$	4.3	A^2s
	PW=10ms, T_{vj}=150°C		2.6	A^2s
Total power dissipation		P_D	34 *3	W
Virtual Junction temperature		T_{vj}	175	°C
Range of storage temperature		T_{stg}	–55 to +175	°C

*1 Limited by maximum T_{vj} and for Max. R_{thJC}.

*2 T_c=100°C, T_{vj}=150°C, Duty cycle=10% *3 T_c=25°C

©2024 ROHM Co., Ltd. All rights reserved.

●Electrical characteristics (T_{vj} = 25°C unless otherwise specified)

Parameter	Symbol	Conditions	Values			Unit
			Min.	Typ.	Max.	
DC blocking voltage	V_{DC}	I_R =1.6mA	650	-	-	V
Forward voltage	V_F	I_F=8A,T_{vj}=25°C	-	1.35	1.55	V
		I_F=8A,T_{vj}=150°C	-	1.55	-	V
		I_F=8A,T_{vj}=175°C	-	1.63	-	V
Reverse current	I_R	V_R=600V,T_{vj}=25°C	-	1.6	160	μA
		V_R=600V,T_{vj}=150°C	-	24	-	μA
		V_R=600V,T_{vj}=175°C	-	56	-	μA
Total capacitance	C	V_R=1V,f=1MHz	-	290	-	pF
		V_R=600V,f=1MHz	-	30	-	pF
Total capacitive charge	Q_C	V_R=400V,di/dt=350A/μs	-	13	-	nC
Switching time	t_C	V_R=400V,di/dt=350A/μs	-	13	-	ns

●Thermal characteristics

Parameter	Symbol	Conditions	Values			Unit
			Min.	Typ.	Max.	
Thermal resistance	R_{thJC}	-	-	3.9	4.4	K/W

●Typical Transient Thermal Characteristics

Symbol	Value	Unit
R_{th1}	8.21E-01	K/W
R_{th2}	1.27E+00	
R_{th3}	1.82E+00	

Symbol	Value	Unit
C_{th1}	1.72E-03	Ws/K
C_{th2}	9.86E-03	
C_{th3}	6.82E-01	

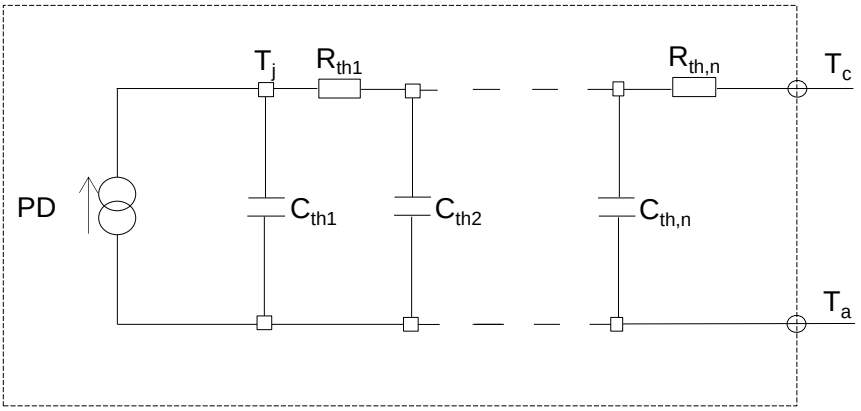

©2024 ROHM Co., Ltd. All rights reserved.

●Electrical characteristic curves

Fig.1 V_F - I_F Characteristics

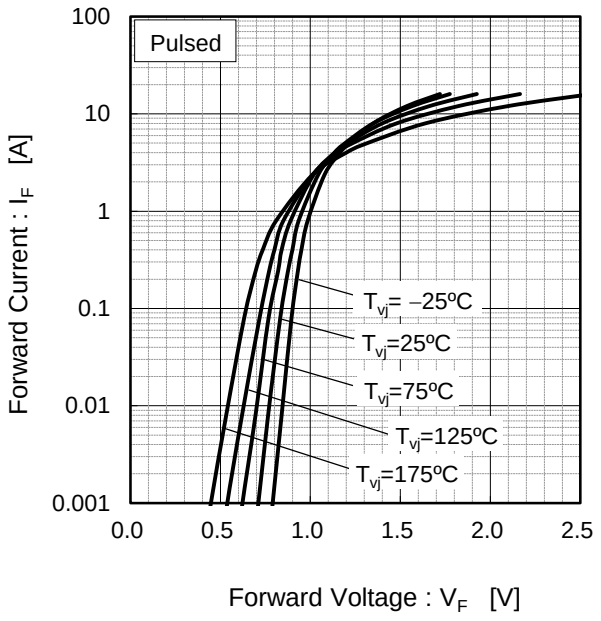

Fig.2 V_F - I_F Characteristics

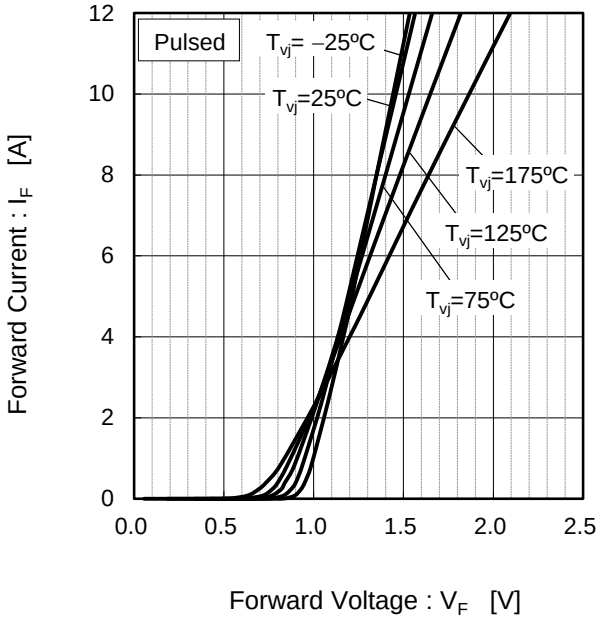

Fig.3 V_R - I_R Characteristics

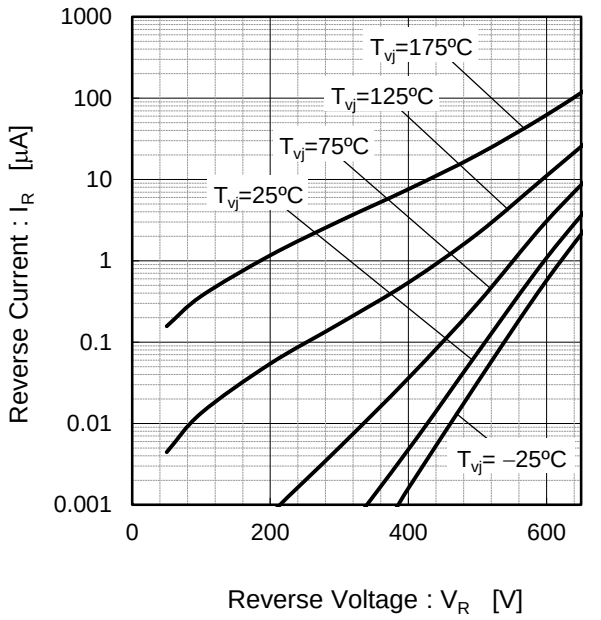

Fig.4 V_R - C_t Characteristics

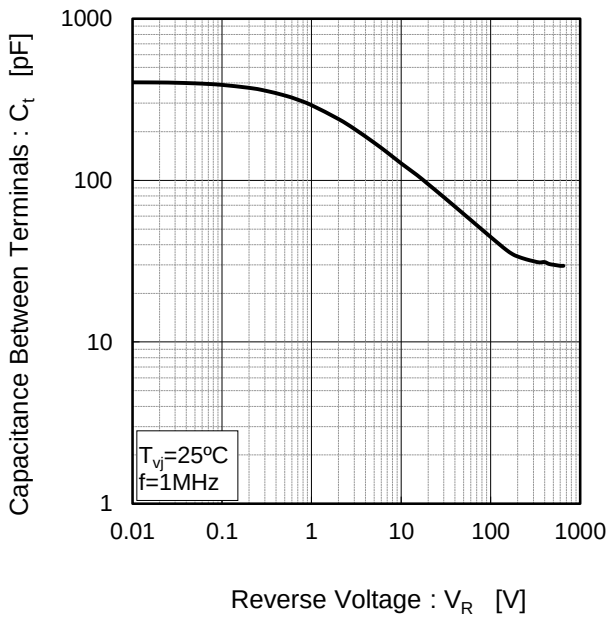

©2024 ROHM Co., Ltd. All rights reserved.

●Electrical characteristic curves

Fig.5 Typical Transient Thermal Impedance vs. Pulse Width

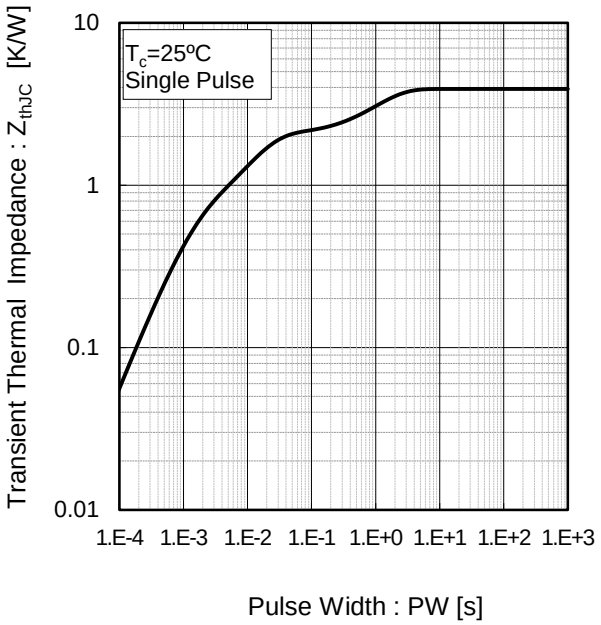

Fig.6 Power Dissipation

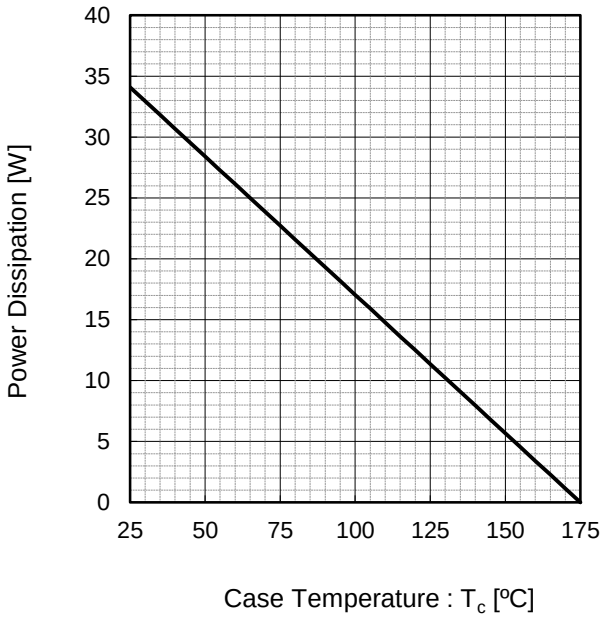

Fig.7*4 Maximum peak forward current derating curve I_P - T_c

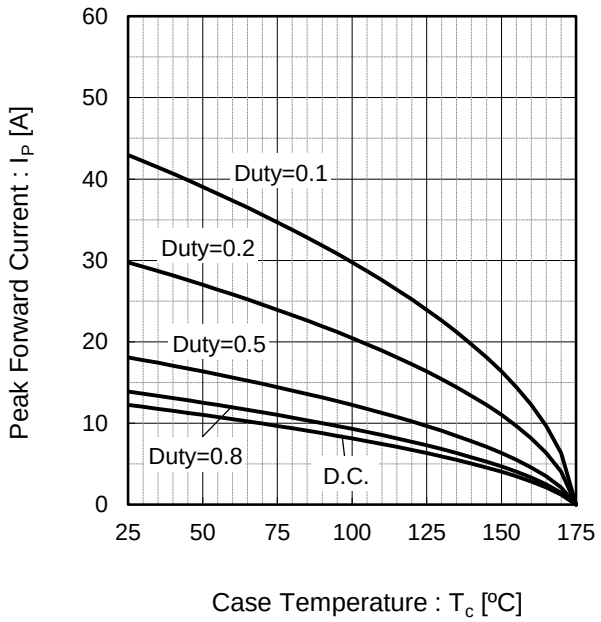

*4 Based on max Vf, max Z_{thJC}
Valid for switching of above 10kHz, excluding D.C. curve.

Fig.8*5 Typical peak forward current derating curve I_P - T_c (Not guaranteed)

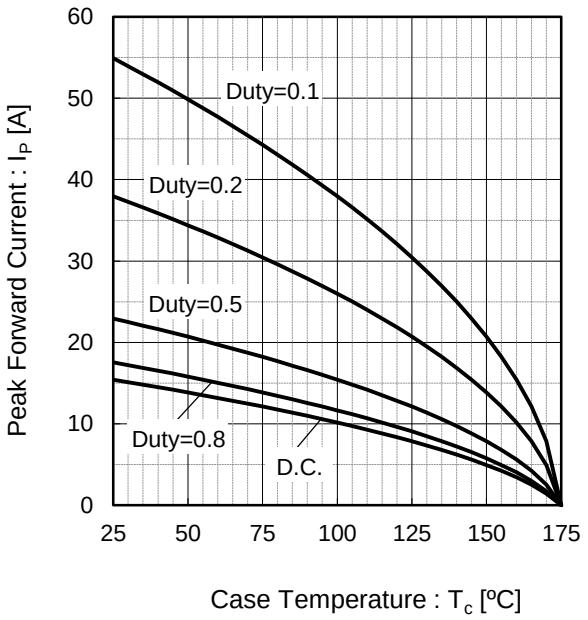

*5 Based on typ Vf, typ Z_{thJC}
Typical value, not guaranteed
Valid for switching of above 10kHz, excluding D.C. curve

©2024 ROHM Co., Ltd. All rights reserved.

●Electrical characteristic curves

Fig.9 Surge non-repetitive forward current vs. Pulse width (Sinusoidal waveform)

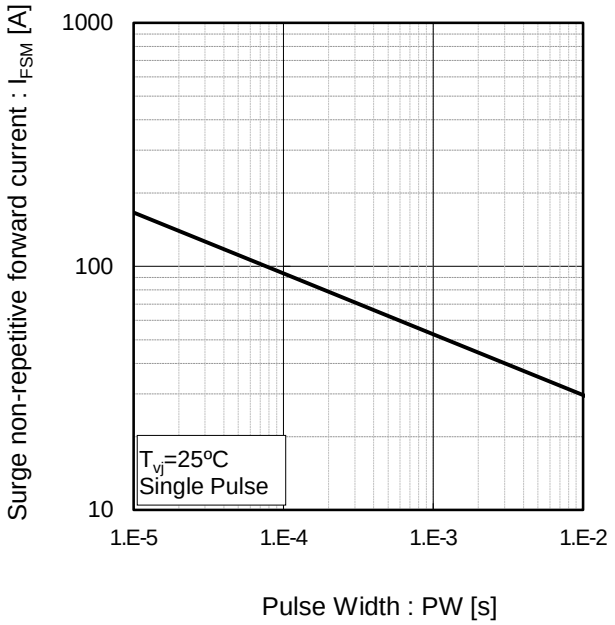

Fig.10 Typical capacitance store energy

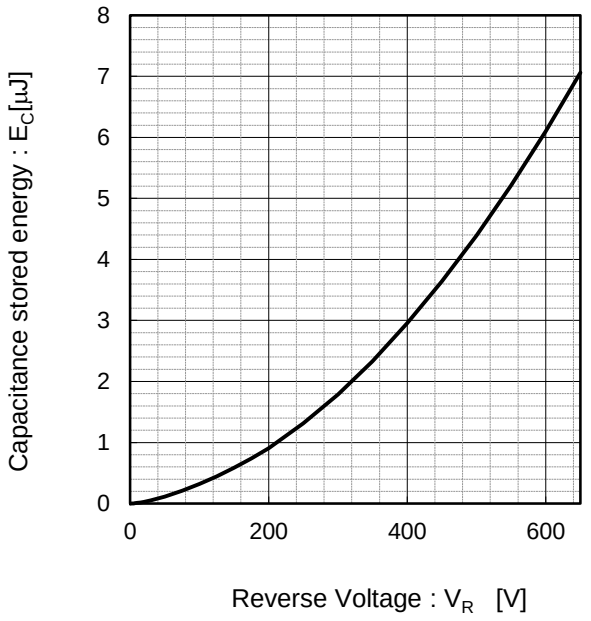

●Symplified forward characteristic model

Fig.11 Equivalent forward current curve

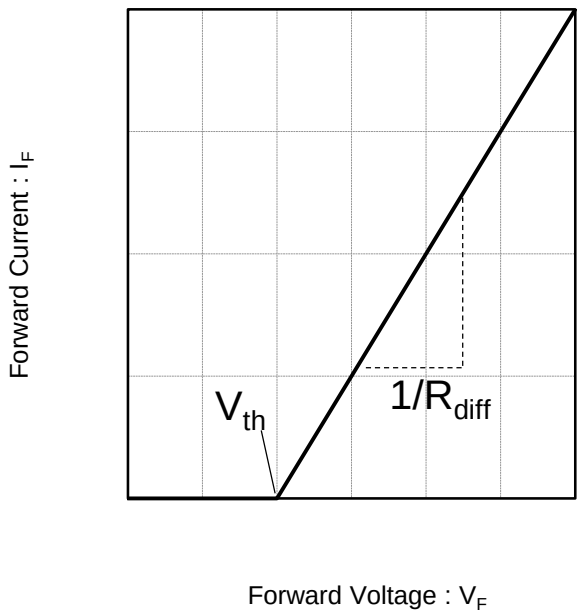

$$V_F = V_{th} + R_{diff} I_F$$

$$V_{th}(T_{vj}) = a_0 + a_1 T_{vj}$$
$$R_{diff}(T_{vj}) = b_0 + b_1 T_{vj} + b_2 T_{vj}^2$$

Symbol	Typical Value	Unit
a_0	9.35E-01	V
a_1	-1.12E-03	V/°C
b_0	4.98E-02	Ω
b_1	1.28E-04	Ω/°C
b_2	1.35E-06	Ω/°C^2

T_{vj} in °C; -55°C < T_{vj} < 175°C ; I_F < 16 A

©2024 ROHM Co., Ltd. All rights reserved.

●**Dimensions** (Unit : mm)

TO-220FM-2LGE

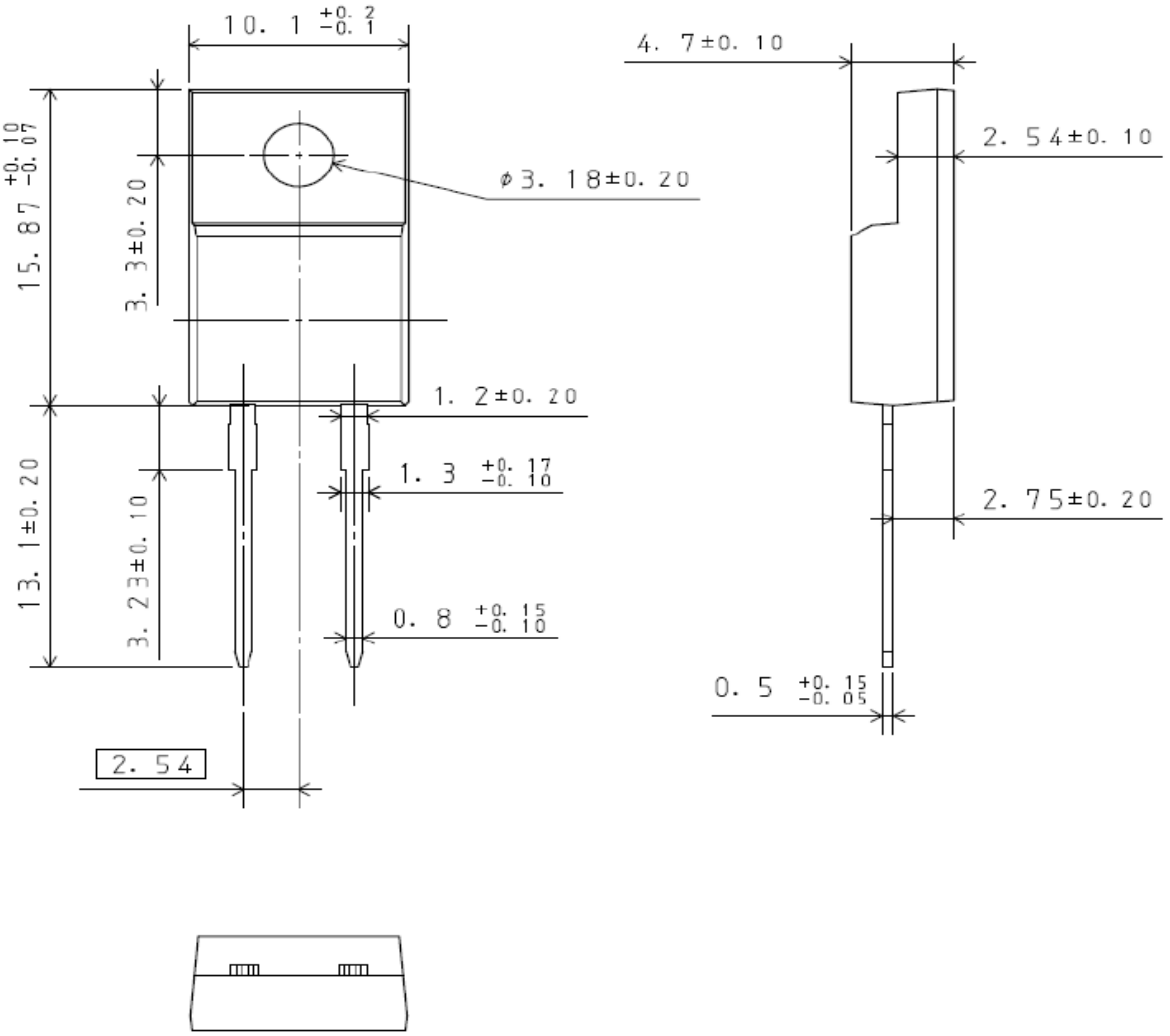

©2024 ROHM Co., Ltd. All rights reserved.

●**Die Bonding Layout** (Unit : mm)

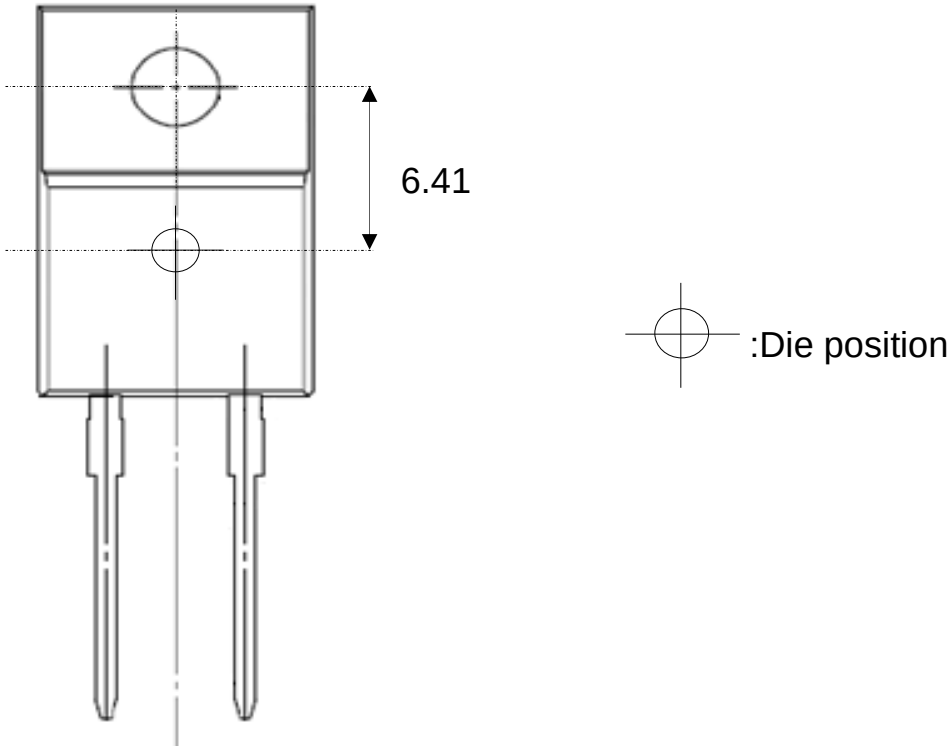

・Front view of the packaging.

・Dimensions are design values.

・If the heat sink is to be installed, it should be in contact with the die bonding point.

©2024 ROHM Co., Ltd. All rights reserved.

Notes

1) The information contained herein is subject to change without notice.

2) Before you use our Products, please contact our sales representative and verify the latest specifications.

3) Although ROHM is continuously working to improve product reliability and quality, semiconductors can break down and malfunction due to various factors.
Therefore, in order to prevent personal injury or fire arising from failure, please take safety measures such as complying with the derating characteristics, implementing redundant and fire prevention designs, and utilizing backups and fail-safe procedures. ROHM shall have no responsibility for any damages arising out of the use of our Poducts beyond the rating specified by ROHM.

4) Examples of application circuits, circuit constants and any other information contained herein are provided only to illustrate the standard usage and operations of the Products. The peripheral conditions must be taken into account when designing circuits for mass production.

5) The technical information specified herein is intended only to show the typical functions of and examples of application circuits for the Products. ROHM does not grant you, explicitly or implicitly, any license to use or exercise intellectual property or other rights held by ROHM or any other parties. ROHM shall have no responsibility whatsoever for any dispute arising out of the use of such technical information.

6) The Products specified in this document are not designed to be radiation tolerant.

7) For use of our Products in applications requiring a high degree of reliability (as exemplified below), please contact and consult with a ROHM representative : transportation equipment (i.e. cars, ships, trains), primary communication equipment, traffic lights, fire/crime prevention, safety equipment, medical systems, and power transmission systems.

8) Do not use our Products in applications requiring extremely high reliability, such as aerospace equipment, nuclear power control systems, and submarine repeaters.

9) ROHM shall have no responsibility for any damages or injury arising from non-compliance with the recommended usage conditions and specifications contained herein.

10) ROHM has used reasonable care to ensure the accuracy of the information contained in this document. However, ROHM does not warrants that such information is error-free, and ROHM shall have no responsibility for any damages arising from any inaccuracy or misprint of such information.

11) Please use the Products in accordance with any applicable environmental laws and regulations, such as the RoHS Directive. For more details, including RoHS compatibility, please contact a ROHM sales office. ROHM shall have no responsibility for any damages or losses resulting non-compliance with any applicable laws or regulations.

12) When providing our Products and technologies contained in this document to other countries, you must abide by the procedures and provisions stipulated in all applicable export laws and regulations, including without limitation the US Export Administration Regulations and the Foreign Exchange and Foreign Trade Act.

13) This document, in part or in whole, may not be reprinted or reproduced without prior consent of ROHM.

ROHM SEMICONDUCTOR

Thank you for your accessing to ROHM product informations.
More detail product informations and catalogs are available, please contact us.

ROHM Customer Support System

http://www.rohm.com/contact/

© 2012 ROHM Co., Ltd. All rights reserved.

General Precaution

1. Before you use our Products, you are requested to carefully read this document and fully understand its contents. ROHM shall not be in any way responsible or liable for failure, malfunction or accident arising from the use of any ROHM's Products against warning, caution or note contained in this document.

2. All information contained in this document is current as of the issuing date and subject to change without any prior notice. Before purchasing or using ROHM's Products, please confirm the latest information with a ROHM sales representative.

3. The information contained in this document is provided on an "as is" basis and ROHM does not warrant that all information contained in this document is accurate and/or error-free. ROHM shall not be in any way responsible or liable for any damages, expenses or losses incurred by you or third parties resulting from inaccuracy or errors of or concerning such information.

© 2015 ROHM Co., Ltd. All rights reserved.