3-to-8 Line Decoder

MM74HC138

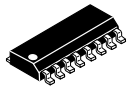

1

SOIC−16
CASE 751B

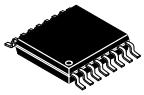

1

TSSOP−16
CASE 948F

Description

The MM74HC138 decoder utilizes advanced silicon−gate CMOS technology and is well suited to memory address decoding or data routing applications. The circuit features high noise immunity and low power consumption usually associated with CMOS circuitry, yet has speeds comparable to low power Schottky TTL logic. The MM74HC138 has 3 binary select inputs (A, B, and C). If the device is enabled, these inputs determine which one of the eight normally HIGH outputs will go LOW. Two active LOW and one active HIGH enables (G1, $\overline{G2A}$ and $\overline{G2B}$) are provided to ease the cascading of decoders. The decoder's outputs can drive 10 low power Schottky TTL equivalent loads, and are functionally and pin equivalent to the 74LS138. All inputs are protected from damage due to static discharge by diodes to V_{CC} and ground.

Features

- Typical Propagation Delay: 18 ns
- Wide Power Supply Range: 2 V − 6 V
- Low Quiescent Current: 80 μA Maximum (74HC Series)
- Low Input Current: 1 μA maximum
- Fanout of 10 LS − TTL Loads
- These are Pb−Free Devices

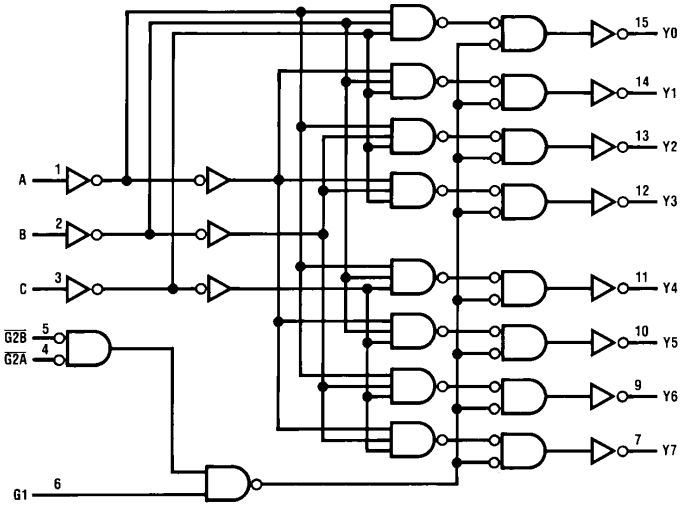

Figure 1. Logic Diagram

MARKING DIAGRAMS

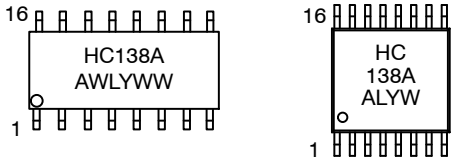

HC138A	=	Specific Device Code
A	=	Assembly Location
L/WL	=	Wafer Lot
Y/YY	=	Year, Last Number
W/WW	=	Work Week

CONNECTION DIAGRAM

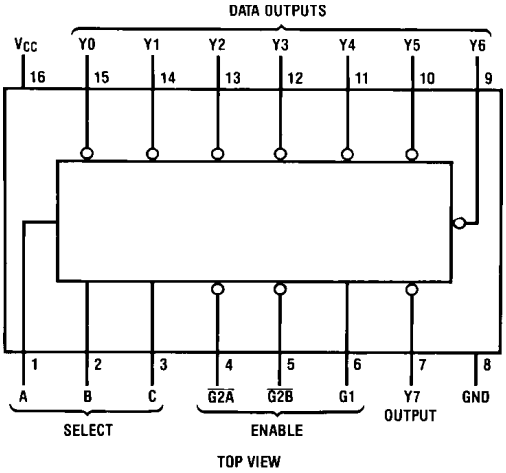

ORDERING INFORMATION

Device	Package	Shipping†
MM74HC138M	SOIC−16 (Pb−Free)	48 Units/Tube
MM74HC138MX	SOIC−16 (Pb−Free)	2500/Tape & Reel
MM74HC138MTCX	TSSOP−16 (Pb−Free)	2500/Tape & Reel

†For information on tape and reel specifications, including part orientation and tape sizes, please refer to our Tape and Reel Packaging Specifications Brochure, BRD8011/D.

© Semiconductor Components Industries, LLC, 1999

TRUTH TABLE

Inputs					Outputs							
Enable		Select										
G1	$\overline{G2}$ (Note 1)	C	B	A	Y0	Y1	Y2	Y3	Y4	Y5	Y6	Y7
X	H	X	X	X	H	H	H	H	H	H	H	H
L	X	X	X	X	H	H	H	H	H	H	H	H
H	L	L	L	L	L	H	H	H	H	H	H	H
H	L	L	L	H	H	L	H	H	H	H	H	H
H	L	L	H	L	H	H	L	H	H	H	H	H
H	L	L	H	H	H	H	H	L	H	H	H	H
H	L	H	L	L	H	H	H	H	L	H	H	H
H	L	H	L	H	H	H	H	H	H	L	H	H
H	L	H	H	L	H	H	H	H	H	H	L	H
H	L	H	H	H	H	H	H	H	H	H	H	L

H = high level; L = low level X = don't care
Note 1: $\overline{G2}$ = G2A + G2B

ABSOLUTE MAXIMUM RATINGS (note 1)

Symbol	Parameter	Value	Unit
V_{CC}	Supply Voltage	–0.5 to + 6.5	V
V_{in}	DC Input Voltage	–0.5 to V_{CC} + 0.5	V
V_{out}	DC Output Voltage	–0.5 to V_{CC} + 0.5	V
I_{IK}, I_{OK}	Clamp Diode Current	±20	mA
I_{out}	DC Output Current, per Pin	±25	mA
I_{CC}	DC V_{CC} or GND Current per Pins	±50	mA
T_{stg}	Storage Temperature. Range	–65 to +150	°C
P_D	Power Dissipation (Note 2) S. O. Package Only	 600 500	mW
T_L	Lead Temperature (Soldering 10 seconds)	260	°C

Stresses exceeding those listed in the Maximum Ratings table may damage the device. If any of these limits are exceeded, device functionality should not be assumed, damage may occur and reliability may be affected.

1. Unless otherwise specified all voltages are referenced to ground.
2. Power Dissipation temperature derating — plastic "N" package: –12 mW/°C from 65°C to 85°C.

RECOMMENDED OPERATING CONDITIONS

Symbol	Parameter	Min	Max	Unit
V_{CC}	Supply Voltage	2	6	V
V_{in}, V_{out}	DC Input Voltage or Output Voltage	0	V_{CC}	V
T_A	Operating Temperature	–40	+85	°C
t_r, t_f	Input Rise or Fall Times V_{CC} = 2.0 V V_{CC} = 4.5 V V_{CC} = 6.0 V	 – – –	 1000 500 400	ns

DC ELECTRICAL CHARACTERISTICS (note 3)

Symbol	Parameter	Conditions	V_{CC} (V)	T_A = 25°C Typ	T_A = 25°C Guaranteed Limits	T_A –40 to 85°C Guaranteed Limits	Unit
V_{IH}	Minimum HIGH−Level Input Voltage		2.0 4.5 6.0	–	1.5 3.15 4.2	1.5 3.15 4.2	V
V_{IL}	Maximum LOW−Level Input Voltage		2.0 4.5 6.0	–	0.5 1.35 1.8	0.5 1.35 1.8	V
V_{OH}	Minimum HIGH−Level Output Voltage	$V_{IN} = V_{IH}$ or V_{IL} $\lvert I_{OUT} \rvert \le 20\ \mu A$	2.0 4.5 6.0	2.0 4.5 6.0	1.9 4.4 5.9	1.9 4.4 5.9	V
		$V_{IN} = V_{IH}$ or V_{IL} $\lvert I_{OUT} \rvert \le 4.0$ mA $\lvert I_{OUT} \rvert \le 5.2$ mA	4.5 6.0	4.2 5.7	3.98 5.48	3.84 5.34	V
V_{OL}	Maximum LOW−Level Output Voltage	$V_{IN} = V_{IH}$ or V_{IL} $\lvert I_{OUT} \rvert \le 20\ \mu A$	2.0 4.5 6.0	0 0 0	0.1 0.1 0.1	0.1 0.1 0.1	V
		$V_{IN} = V_{IH}$ or V_{IL} $\lvert I_{OUT} \rvert \le 4.0$ mA $\lvert I_{OUT} \rvert \le 5.2$ mA	4.5 6.0	0.2 0.2	0.26 0.26	0.33 0.33	V
I_{IN}	Maximum Input Current	$V_{IN} = V_{CC}$ or GND	6.0	–	±0.1	±0.1	μA
I_{CC}	Maximum Quiescent Supply Current	$V_{IN} = V_{CC}$ or GND $I_{OUT} = 0\ \mu A$	6.0	–	8.0	80	μA

3. For a power supply of 5 V ±10% the worst case output voltages (V_{OH}, and V_{OL}) occur for HC at 4.5 V. Thus the 4.5 V values should be used when designing with this supply. Worst case V_{IH} and V_{IL} occur at V_{CC} = 5.5 V and 4.5 V respectively. (The V_{IH} value at 5.5 V is 3.85 V.) The worst case leakage current (I_{IN}, I_{CC}, and I_{OZ}) occur for CMOS at the higher voltage and so the 6.0 V values should be used.

AC ELECTRICAL CHARACTERISTICS (V_{CC} = 5 V, T_A = 25°C, C_L = 15 pF, $t_r = t_f$ = 6 ns)

Symbol	Parameter	Conditions	Typ	Guaranteed Limit	Unit
t_{PLH}	Maximum Propagation Delay, Binary Select to any Output		18	25	ns
t_{PHL}	Maximum Propagation Delay, Binary Select to any Output		28	35	ns
t_{PHL}, t_{PLH}	Maximum Propagation Delay, G1 to any Output		18	25	ns
t_{PHL}	Maximum Propagation Delay, $\overline{G2A}$ or $\overline{G2B}$ to Output		23	30	ns
t_{PLH}	Maximum Propagation Delay, $\overline{G2A}$ or $\overline{G2B}$ to Output		18	25	ns

AC ELECTRICAL CHARACTERISTICS (C_L = 50 pF, tr = tf = 6 ns unless otherwise specified)

Symbol	Parameter	Conditions	V_{CC} (V)	T_A = 25°C Typ	T_A = 25°C Guaranteed Limit	T_A = –40 to 85°C Guaranteed Limit	Unit
t_{PLH}	Maximum Propagation Delay, Binary Select to any Output LOW−to−HIGH		2.0 4.5 6.0	75 15 13	150 30 26	189 38 32	ns
t_{PHL}	Maximum Propagation Delay, Binary Select to any Output HIGH−to−LOW		2.0 4.5 6.0	100 20 17	200 40 34	252 50 43	ns
t_{PHL}, t_{PLH}	Maximum Propagation Delay G1 to any Output		2.0 4.5 6.0	75 15 13	150 30 26	189 38 32	ns

AC ELECTRICAL CHARACTERISTICS (C_L = 50 pF, tr = tf = 6 ns unless otherwise specified) (continued)

Symbol	Parameter	Conditions	V_{CC} (V)	T_A = 25°C		T_A = −40 to 85°C	Unit
				Typ	Guaranteed Limit		
t_{PHL}	Maximum Propagation Delay $\overline{G2A}$ or $\overline{G2B}$ to Output		2.0 4.5 6.0	82 28 22	175 35 30	221 44 37	ns
t_{PLH}	Maximum Propagation Delay $\overline{G2A}$ or $\overline{G2B}$ to Output		2.0 4.5 6.0	75 15 13	150 30 26	189 38 32	ns
t_{TLH}, t_{THL}	Output Rise and Fall Time		2.0 4.5 6.0	30 8 7	75 15 13	95 19 16	ns
C_{IN}	Maximum Input Capacitance		–	3	10	10	pF
C_{PD}	Power Dissipation Capacitance	(Note 4)	–	75	–	–	pF

4. CPD determines the no load dynamic power consumption, $P_D = C_{PD} V_{CC}^2 f + I_{CC} V_{CC}$, and the no load dynamic current consumption, $I_S = C_{PD} V_{CC} f + I_{CC}$.

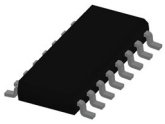

SOIC−16 9.90x3.90x1.37 1.27P
CASE 751B
ISSUE M

DATE 18 OCT 2024

NOTES:
1. DIMENSIONING AND TOLERANCING PER ASME Y14.5M, 2018.
2. DIMENSION IN MILLIMETERS. ANGLE IN DEGREES.
3. DIMENSIONS D AND E1 DO NOT INCLUDE MOLD PROTRUSION.
4. MAXIMUM MOLD PROTRUSION 0.15mm PER SIDE.
5. DIMENSION b DOES NOT INCLUDE DAMBAR PROTRUSION. ALLOWABLE DAMBAR PROTRUSION SHALL BE 0.127mm TOTAL IN EXCESS OF THE b DIMENSION AT MAXIMUM MATERIAL CONDITION.

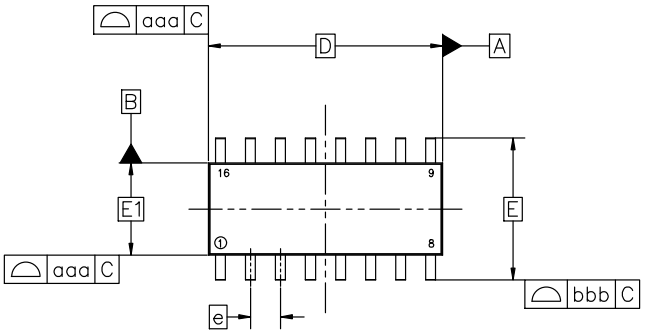

TOP VIEW

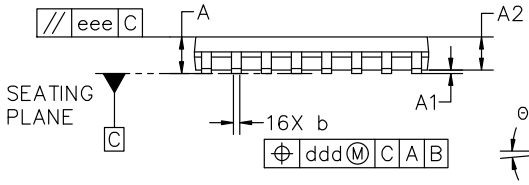

SIDE VIEW

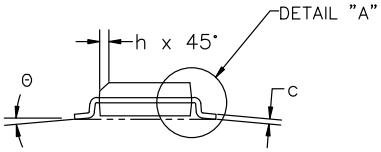

END VIEW

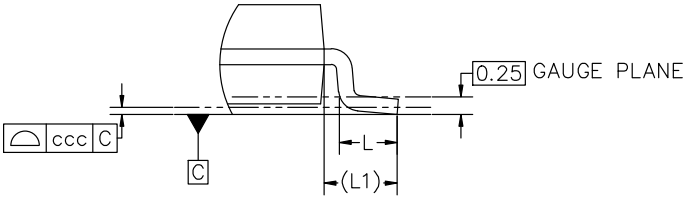

DETAIL "A"
Scale 3:1

MILLIMETERS			
DIM	MIN	NOM	MAX
A	1.35	1.55	1.75
A1	0.10	0.18	0.25
A2	1.25	1.37	1.50
b	0.35	0.42	0.49
c	0.19	0.22	0.25
D	9.90 BSC		
E	6.00 BSC		
E1	3.90 BSC		
e	1.27 BSC		
h	0.25	---	0.50
L	0.40	0.83	1.25
L1	1.05 REF		
Θ	0°	---	7°
TOLERANCE OF FORM AND POSITION			
aaa	0.10		
bbb	0.20		
ccc	0.10		
ddd	0.25		
eee	0.10		

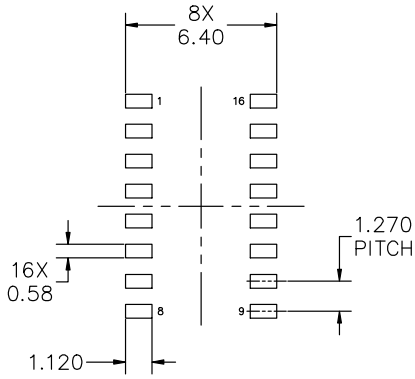

RECOMMENDED MOUNTING FOOTPRINT

*FOR ADDITIONAL INFORMATION ON OUR PB−FREE STRATEGY AND SOLDERING DETAILS, PLEASE DOWNLOAD THE onsemi SOLDERING AND MOUNTING TECHNIQUES REFERENCE MANUAL, SOLDERRM/D

DOCUMENT NUMBER:	98ASB42566B	Electronic versions are uncontrolled except when accessed directly from the Document Repository. Printed versions are uncontrolled except when stamped "CONTROLLED COPY" in red.
DESCRIPTION:	SOIC−16 9.90X3.90X1.37 1.27P	PAGE 1 OF 2

onsemi and onsemi are trademarks of Semiconductor Components Industries, LLC dba **onsemi** or its subsidiaries in the United States and/or other countries. **onsemi** reserves the right to make changes without further notice to any products herein. **onsemi** makes no warranty, representation or guarantee regarding the suitability of its products for any particular purpose, nor does **onsemi** assume any liability arising out of the application or use of any product or circuit, and specifically disclaims any and all liability, including without limitation special, consequential or incidental damages. **onsemi** does not convey any license under its patent rights nor the rights of others.

SOIC−16 9.90x3.90x1.37 1.27P
CASE 751B
ISSUE M

DATE 18 OCT 2024

GENERIC MARKING DIAGRAM*

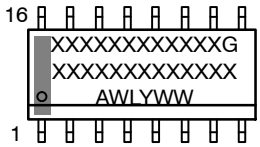

XXXXX = Specific Device Code
A = Assembly Location
WL = Wafer Lot
Y = Year
WW = Work Week
G = Pb−Free Package

*This information is generic. Please refer to device data sheet for actual part marking. Pb−Free indicator, “G” or microdot “▪”, may or may not be present. Some products may not follow the Generic Marking.

STYLE 1:

PIN 1.	COLLECTOR
2.	BASE
3.	EMITTER
4.	NO CONNECTION
5.	EMITTER
6.	BASE
7.	COLLECTOR
8.	COLLECTOR
9.	BASE
10.	EMITTER
11.	NO CONNECTION
12.	EMITTER
13.	BASE
14.	COLLECTOR
15.	EMITTER
16.	COLLECTOR

STYLE 2:

PIN 1.	CATHODE
2.	ANODE
3.	NO CONNECTION
4.	CATHODE
5.	CATHODE
6.	NO CONNECTION
7.	ANODE
8.	CATHODE
9.	CATHODE
10.	ANODE
11.	NO CONNECTION
12.	CATHODE
13.	CATHODE
14.	NO CONNECTION
15.	ANODE
16.	CATHODE

STYLE 3:

PIN 1.	COLLECTOR, DYE #1
2.	BASE, #1
3.	EMITTER, #1
4.	COLLECTOR, #1
5.	COLLECTOR, #2
6.	BASE, #2
7.	EMITTER, #2
8.	COLLECTOR, #2
9.	COLLECTOR, #3
10.	BASE, #3
11.	EMITTER, #3
12.	COLLECTOR, #3
13.	COLLECTOR, #4
14.	BASE, #4
15.	EMITTER, #4
16.	COLLECTOR, #4

STYLE 4:

PIN 1.	COLLECTOR, DYE #1
2.	COLLECTOR, #1
3.	COLLECTOR, #2
4.	COLLECTOR, #2
5.	COLLECTOR, #3
6.	COLLECTOR, #3
7.	COLLECTOR, #4
8.	COLLECTOR, #4
9.	BASE, #4
10.	EMITTER, #4
11.	BASE, #3
12.	EMITTER, #3
13.	BASE, #2
14.	EMITTER, #2
15.	BASE, #1
16.	EMITTER, #1

STYLE 5:

PIN 1.	DRAIN, DYE #1
2.	DRAIN, #1
3.	DRAIN, #2
4.	DRAIN, #2
5.	DRAIN, #3
6.	DRAIN, #3
7.	DRAIN, #4
8.	DRAIN, #4
9.	GATE, #4
10.	SOURCE, #4
11.	GATE, #3
12.	SOURCE, #3
13.	GATE, #2
14.	SOURCE, #2
15.	GATE, #1
16.	SOURCE, #1

STYLE 6:

PIN 1.	CATHODE
2.	CATHODE
3.	CATHODE
4.	CATHODE
5.	CATHODE
6.	CATHODE
7.	CATHODE
8.	CATHODE
9.	ANODE
10.	ANODE
11.	ANODE
12.	ANODE
13.	ANODE
14.	ANODE
15.	ANODE
16.	ANODE

STYLE 7:

PIN 1.	SOURCE N-CH
2.	COMMON DRAIN (OUTPUT)
3.	COMMON DRAIN (OUTPUT)
4.	GATE P-CH
5.	COMMON DRAIN (OUTPUT)
6.	COMMON DRAIN (OUTPUT)
7.	COMMON DRAIN (OUTPUT)
8.	SOURCE P-CH
9.	SOURCE P-CH
10.	COMMON DRAIN (OUTPUT)
11.	COMMON DRAIN (OUTPUT)
12.	COMMON DRAIN (OUTPUT)
13.	GATE N-CH
14.	COMMON DRAIN (OUTPUT)
15.	COMMON DRAIN (OUTPUT)
16.	SOURCE N-CH

onsemi and onsemi are trademarks of Semiconductor Components Industries, LLC dba **onsemi** or its subsidiaries in the United States and/or other countries. **onsemi** reserves the right to make changes without further notice to any products herein. **onsemi** makes no warranty, representation or guarantee regarding the suitability of its products for any particular purpose, nor does **onsemi** assume any liability arising out of the application or use of any product or circuit, and specifically disclaims any and all liability, including without limitation special, consequential or incidental damages. **onsemi** does not convey any license under its patent rights nor the rights of others.

© Semiconductor Components Industries, LLC, 2019

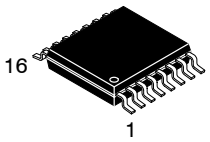

SCALE 2:1

TSSOP−16 WB
CASE 948F
ISSUE B

DATE 19 OCT 2006

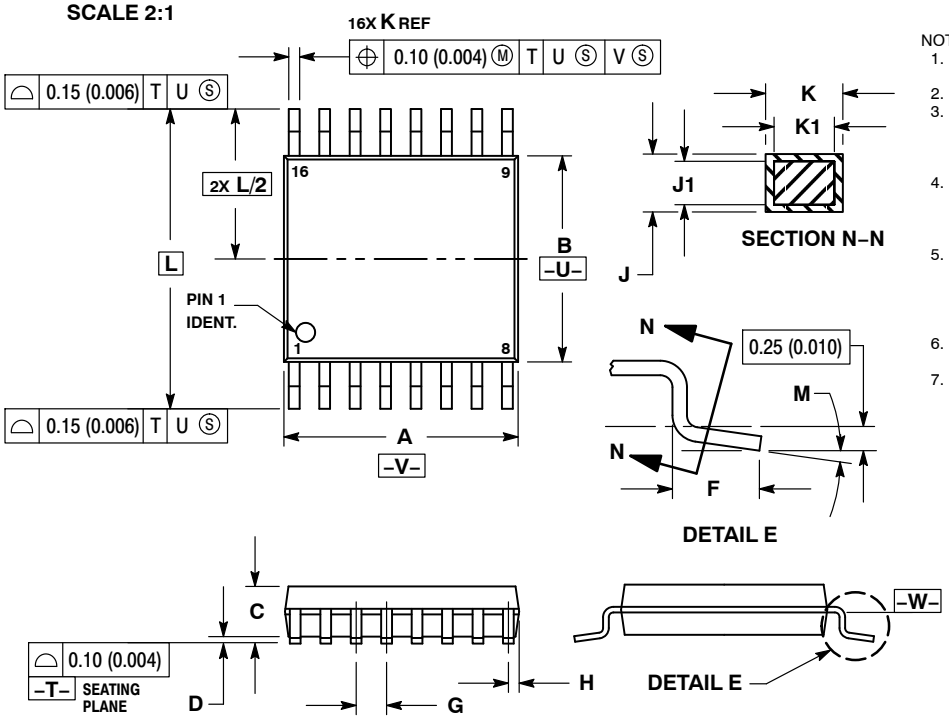

NOTES:
1. DIMENSIONING AND TOLERANCING PER ANSI Y14.5M, 1982.
2. CONTROLLING DIMENSION: MILLIMETER.
3. DIMENSION A DOES NOT INCLUDE MOLD FLASH. PROTRUSIONS OR GATE BURRS. MOLD FLASH OR GATE BURRS SHALL NOT EXCEED 0.15 (0.006) PER SIDE.
4. DIMENSION B DOES NOT INCLUDE INTERLEAD FLASH OR PROTRUSION. INTERLEAD FLASH OR PROTRUSION SHALL NOT EXCEED 0.25 (0.010) PER SIDE.
5. DIMENSION K DOES NOT INCLUDE DAMBAR PROTRUSION. ALLOWABLE DAMBAR PROTRUSION SHALL BE 0.08 (0.003) TOTAL IN EXCESS OF THE K DIMENSION AT MAXIMUM MATERIAL CONDITION.
6. TERMINAL NUMBERS ARE SHOWN FOR REFERENCE ONLY.
7. DIMENSION A AND B ARE TO BE DETERMINED AT DATUM PLANE −W−.

	MILLIMETERS		INCHES	
DIM	MIN	MAX	MIN	MAX
A	4.90	5.10	0.193	0.200
B	4.30	4.50	0.169	0.177
C	−−−	1.20	−−−	0.047
D	0.05	0.15	0.002	0.006
F	0.50	0.75	0.020	0.030
G	0.65 BSC		0.026 BSC	
H	0.18	0.28	0.007	0.011
J	0.09	0.20	0.004	0.008
J1	0.09	0.16	0.004	0.006
K	0.19	0.30	0.007	0.012
K1	0.19	0.25	0.007	0.010
L	6.40 BSC		0.252 BSC	
M	0 °	8 °	0 °	8 °

RECOMMENDED SOLDERING FOOTPRINT*

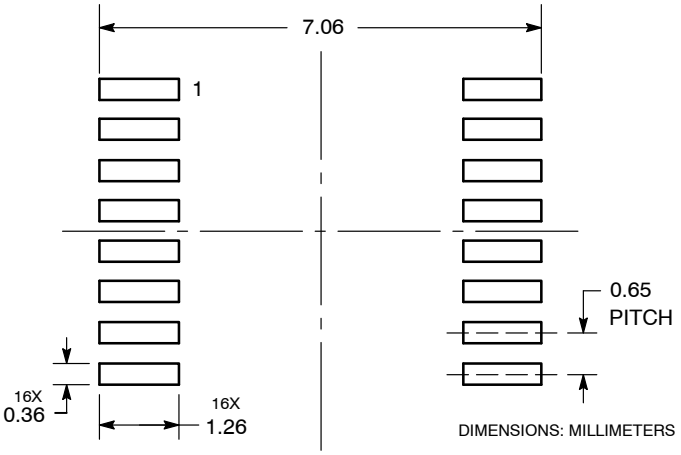

*For additional information on our Pb−Free strategy and soldering details, please download the **onsemi** Soldering and Mounting Techniques Reference Manual, SOLDERRM/D.

GENERIC MARKING DIAGRAM*

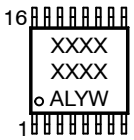

XXXX = Specific Device Code
A = Assembly Location
L = Wafer Lot
Y = Year
W = Work Week
G or ▪ = Pb−Free Package

*This information is generic. Please refer to device data sheet for actual part marking. Pb−Free indicator, “G” or microdot “ ▪”, may or may not be present. Some products may not follow the Generic Marking.

DOCUMENT NUMBER:	98ASH70247A	Electronic versions are uncontrolled except when accessed directly from the Document Repository. Printed versions are uncontrolled except when stamped “CONTROLLED COPY” in red.
DESCRIPTION:	TSSOP−16	PAGE 1 OF 1

onsemi and onsemi are trademarks of Semiconductor Components Industries, LLC dba **onsemi** or its subsidiaries in the United States and/or other countries. **onsemi** reserves the right to make changes without further notice to any products herein. **onsemi** makes no warranty, representation or guarantee regarding the suitability of its products for any particular purpose, nor does **onsemi** assume any liability arising out of the application or use of any product or circuit, and specifically disclaims any and all liability, including without limitation special, consequential or incidental damages. **onsemi** does not convey any license under its patent rights nor the rights of others.

onsemi, onsemi, and other names, marks, and brands are registered and/or common law trademarks of Semiconductor Components Industries, LLC dba "**onsemi**" or its affiliates and/or subsidiaries in the United States and/or other countries. **onsemi** owns the rights to a number of patents, trademarks, copyrights, trade secrets, and other intellectual property. A listing of **onsemi**'s product/patent coverage may be accessed at www.onsemi.com/site/pdf/Patent−Marking.pdf. **onsemi** reserves the right to make changes at any time to any products or information herein, without notice. The information herein is provided "as−is" and **onsemi** makes no warranty, representation or guarantee regarding the accuracy of the information, product features, availability, functionality, or suitability of its products for any particular purpose, nor does **onsemi** assume any liability arising out of the application or use of any product or circuit, and specifically disclaims any and all liability, including without limitation special, consequential or incidental damages. Buyer is responsible for its products and applications using **onsemi** products, including compliance with all laws, regulations and safety requirements or standards, regardless of any support or applications information provided by **onsemi**. "Typical" parameters which may be provided in **onsemi** data sheets and/or specifications can and do vary in different applications and actual performance may vary over time. All operating parameters, including "Typicals" must be validated for each customer application by customer's technical experts. **onsemi** does not convey any license under any of its intellectual property rights nor the rights of others. **onsemi** products are not designed, intended, or authorized for use as a critical component in life support systems or any FDA Class 3 medical devices or medical devices with a same or similar classification in a foreign jurisdiction or any devices intended for implantation in the human body. Should Buyer purchase or use **onsemi** products for any such unintended or unauthorized application, Buyer shall indemnify and hold **onsemi** and its officers, employees, subsidiaries, affiliates, and distributors harmless against all claims, costs, damages, and expenses, and reasonable attorney fees arising out of, directly or indirectly, any claim of personal injury or death associated with such unintended or unauthorized use, even if such claim alleges that **onsemi** was negligent regarding the design or manufacture of the part. **onsemi** is an Equal Opportunity/Affirmative Action Employer. This literature is subject to all applicable copyright laws and is not for resale in any manner.

ADDITIONAL INFORMATION

TECHNICAL PUBLICATIONS:
Technical Library: www.onsemi.com/design/resources/technical−documentation
onsemi Website: www.onsemi.com

ONLINE SUPPORT: www.onsemi.com/support
For additional information, please contact your local Sales Representative at
www.onsemi.com/support/sales