4-Bit Transparent Latch / 4-to-16 Line Decoder

MC14514B, MC14515B

The MC14514B and MC14515B are two output options of a 4 to 16 line decoder with latched inputs. The MC14514B (output active high option) presents a logical “1” at the selected output, whereas the MC14515B (output active low option) presents a logical “0” at the selected output. The latches are R-S type flip-flops which hold the last input data presented prior to the strobe transition from “1” to “0”. These high and low options of a 4-bit latch / 4 to 16 line decoder are constructed with N-channel and P-channel enhancement mode devices in a single monolithic structure. The latches are R-S type flip-flops and data is admitted upon a signal incident at the strobe input, decoded, and presented at the output.

These complementary circuits find primary use in decoding applications where low power dissipation and/or high noise immunity is desired.

Features

- Supply Voltage Range = 3.0 Vdc to 18 Vdc
- Capable of Driving Two Low-power TTL Loads or One Low-power Schottky TTL Load the Rated Temperature Range
- These Devices are Pb-Free and are RoHS Compliant
- NLV Prefix for Automotive and Other Applications Requiring Unique Site and Control Change Requirements; AEC-Q100 Qualified and PPAP Capable

MAXIMUM RATINGS (Voltages Referenced to V_{SS})

Parameter	Symbol	Value	Unit
DC Supply Voltage Range	V_{DD}	−0.5 to +18.0	V
Input or Output Voltage Range (DC or Transient)	V_{in}, V_{out}	−0.5 to V_{DD} +0.5	V
Input or Output Current (DC or Transient) per Pin	I_{in}, I_{out}	±10	mA
Power Dissipation per Package (Note 1)	P_D	500	mW
Ambient Temperature Range	T_A	−55 to +125	°C
Storage Temperature Range	T_{stg}	−65 to +150	°C
Lead Temperature (8-Second Soldering)	T_L	260	°C

Stresses exceeding those listed in the Maximum Ratings table may damage the device. If any of these limits are exceeded, device functionality should not be assumed, damage may occur and reliability may be affected. Operating the device outside its recommended conditions, but still within its maximum rated limits may not cause immediate damage. However, doing so can lead to reduced performance, unpredictable behavior, and potentially shorten the device’s lifespan or reliability.

1. Temperature Derating: Plastic “P and D/DW”
   Packages: – 7.0 mW/°C From 65 °C To 125 °C

This device contains protection circuitry to guard against damage due to high static voltages or electric fields. However, precautions must be taken to avoid applications of any voltage higher than maximum rated voltages to this high-impedance circuit. For proper operation, V_{in} and V_{out} should be constrained to the range $V_{SS} \leq (V_{in}$ or $V_{out}) \leq V_{DD}$.

Unused inputs must always be tied to an appropriate logic voltage level (e.g., either V_{SS} or V_{DD}). Unused outputs must be left open.

SOIC-24
DW SUFFIX
CASE 751E

MARKING DIAGRAM

xx = 14 or 15
A = Assembly Location
WL = Wafer Lot
YY = Year
WW = Work Week
G = Pb-Free Package

PIN ASSIGNMENT

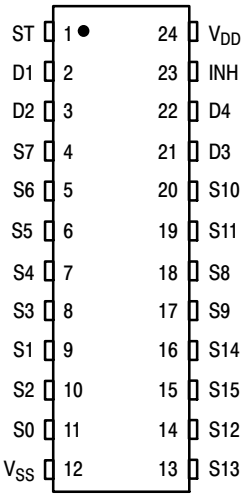

ORDERING INFORMATION

See detailed ordering and shipping information in the package dimensions section on page 2 of this data sheet.

© Semiconductor Components Industries, LLC, 2013

BLOCK DIAGRAM

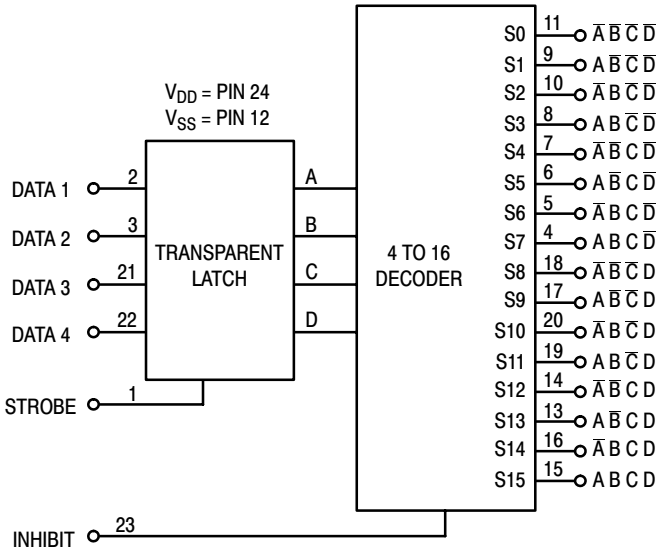

DECODE TRUTH TABLE (Strobe = 1)*

Inhibit	Data Inputs D	C	B	A	Selected Output MC14514 = Logic "1" MC14515 = Logic "0"
0	0	0	0	0	S0
0	0	0	0	1	S1
0	0	0	1	0	S2
0	0	0	1	1	S3
0	0	1	0	0	S4
0	0	1	0	1	S5
0	0	1	1	0	S6
0	0	1	1	1	S7
0	1	0	0	0	S8
0	1	0	0	1	S9
0	1	0	1	0	S10
0	1	0	1	1	S11
0	1	1	0	0	S12
0	1	1	0	1	S13
0	1	1	1	0	S14
0	1	1	1	1	S15
1	X	X	X	X	All Outputs = 0, MC14514 All Outputs = 1, MC14515

X = Don't Care
*Strobe = 0, Data is latched

ORDERING INFORMATION

Device	Package	Shipping†
MC14514BDWR2G	SOIC-24 (Pb-Free)	1000 / Tape & Reel
NLV14514BDWR2G*		
MC14515BDWR2G	SOIC-24 (Pb-Free)	1000 / Tape & Reel
NLV14515BDWR2G*		

† For information on tape and reel specifications, including part orientation and tape sizes, please refer to our Tape and Reel Packaging Specifications Brochure, BRD8011/D.

* NLV Prefix for Automotive and Other Applications Requiring Unique Site and Control Change Requirements; AEC-Q100 Qualified and PPAP Capable.

ELECTRICAL CHARACTERISTICS (Voltages Referenced to V_{SS})

Characteristic	Symbol	V_{DD} Vdc	−55 °C Min	−55 °C Max	25 °C Min	25 °C Typ (Note 2)	25 °C Max	125 °C Min	125 °C Max	Unit
Output Voltage "0" Level V_{in} = V_{DD} or 0	V_{OL}	5.0 10 15	– – –	0.05 0.05 0.05	– – –	0 0 0	0.05 0.05 0.05	– – –	0.05 0.05 0.05	Vdc
"1" Level V_{in} = 0 or V_{DD}	V_{OH}	5.0 10 15	4.95 9.95 14.95	– – –	4.95 9.95 14.95	5.0 10 15	– – –	4.95 9.95 14.95	– – –	Vdc
Input Voltage "0" Level (V_O = 4.5 or 0.5 Vdc) (V_O = 9.0 or 1.0 Vdc) (V_O = 13.5 or 1.5 Vdc)	V_{IL}	5.0 10 15	– – –	1.5 3.0 4.0	– – –	2.25 4.50 6.75	1.5 3.0 4.0	– – –	1.5 3.0 4.0	Vdc
"1" Level (V_O = 0.5 or 4.5 Vdc) (V_O = 1.0 or 9.0 Vdc) (V_O = 1.5 or 13.5 Vdc)	V_{IH}	5.0 10 15	3.5 7.0 11	– – –	3.5 7.0 11	2.75 5.50 8.25	– – –	3.5 7.0 11	– – –	Vdc
Output Drive Current (V_{OH} = 2.5 Vdc) Source (V_{OH} = 4.6 Vdc) (V_{OH} = 9.5 Vdc) (V_{OH} = 13.5 Vdc)	I_{OH}	5.0 5.0 10 15	– 1.2 – 0.25 – 0.62 – 1.8	– – – –	– 1.0 – 0.2 – 0.5 – 1.5	– 1.7 – 0.36 – 0.9 – 3.5	– – – –	– 0.7 – 0.14 – 0.35 – 1.1	– – – –	mAdc
(V_{OL} = 0.4 Vdc) Sink (V_{OL} = 0.5 Vdc) (V_{OL} = 1.5 Vdc)	I_{OL}	5.0 10 15	0.64 1.6 4.2	– – –	0.51 1.3 3.4	0.88 2.25 8.8	– – –	0.36 0.9 2.4	– – –	mAdc
Input Current	I_{in}	15	–	±0.1	–	±0.00001	±0.1	–	±1.0	μAdc
Input Capacitance (V_{in} = 0)	C_{in}	–	–	–	–	5.0	7.5	–	–	pF
Quiescent Current (Per Package)	I_{DD}	5.0 10 15	– – –	5.0 10 20	– – –	0.005 0.010 0.015	5.0 10 20	– – –	150 300 600	μAdc
Total Supply Current (Note 3, 4) (Dynamic plus Quiescent, Per Package) (C_L = 50 pF on all outputs, all buffers switching)	I_{TL}	5.0 10 15	I_T = (1.35 μA/kHz) f + I_{DD} I_T = (2.70 μA/kHz) f + I_{DD} I_T = (4.05 μA/kHz) f + I_{DD}							μAdc

2. Data labelled "Typ" is not to be used for design purposes but is intended as an indication of the IC's potential performance.
3. The formulas given are for the typical characteristics only at 25 °C.
4. To calculate total supply current at loads other than 50 pF: $I_T(C_L) = I_T(50\ pF) + (C_L – 50)$ Vfk where: I_T is in μA (per package), C_L in pF, V = (V_{DD} – V_{SS}) in volts, f in kHz is input frequency, and k = 0.002.

SWITCHING CHARACTERISTICS (Note 5) (C_L = 50 pF, T_A = 25 °C)

Characteristic	Symbol	V_{DD}	All Types Min	All Types Typ (Note 6)	All Types Max	Unit
Output Rise Time t_{TLH} = (3.0 ns/pF) C_L + 30 ns t_{TLH} = (1.5 ns/pF) C_L + 15 ns t_{TLH} = (1.1 ns/pF) C_L + 10 ns	t_{TLH}	 5.0 10 15	 – – –	 180 90 65	 360 180 130	ns
Output Fall Time t_{THL} = (1.5 ns/pF) C_L + 25 ns t_{THL} = (0.75 ns/pF) C_L + 12.5 ns t_{THL} = (0.55 ns/pF) C_L + 9.5 ns	t_{THL}	 5.0 10 15	 – – –	 100 50 40	 200 100 80	ns
Propagation Delay Time; Data, Strobe to S t_{PLH}, t_{PHL} = (1.7 ns/pF) C_L + 465 ns t_{PLH}, t_{PHL} = (0.86 ns/pF) C_L + 192 ns t_{PLH}, t_{PHL} = (0.5 ns/pF) C_L + 125 ns	t_{PLH}, t_{PHL}	 5.0 10 15	 – – –	 550 225 150	 1100 450 300	ns
Inhibit Propagation Delay Times t_{PLH}, t_{PHL} = (1.7 ns/pF) C_L + 315 ns t_{PLH}, t_{PHL} = (0.66 ns/pF) C_L + 117 ns t_{PLH}, t_{PHL} = (0.5 ns/pF) C_L + 75 ns	t_{PLH}, t_{PHL}	 5.0 10 15	 – – –	 400 150 100	 800 300 200	ns
Setup Time Data to Strobe	t_{su}	 5.0 10 15	 250 100 75	 125 50 38	 – – –	ns
Hold Time Strobe to Data	t_h	5.0 10 15	– 20 0 10	– 100 – 40 – 30	– – –	ns
Strobe Pulse Width	t_{WH}	 5.0 10 15	 350 100 75	 175 50 38	 – – –	ns

5. The formulas given are for the typical characteristics only at 25 °C.
6. Data labelled “Typ” is not to be used for design purposes but is intended as an indication of the IC’s potential performance.

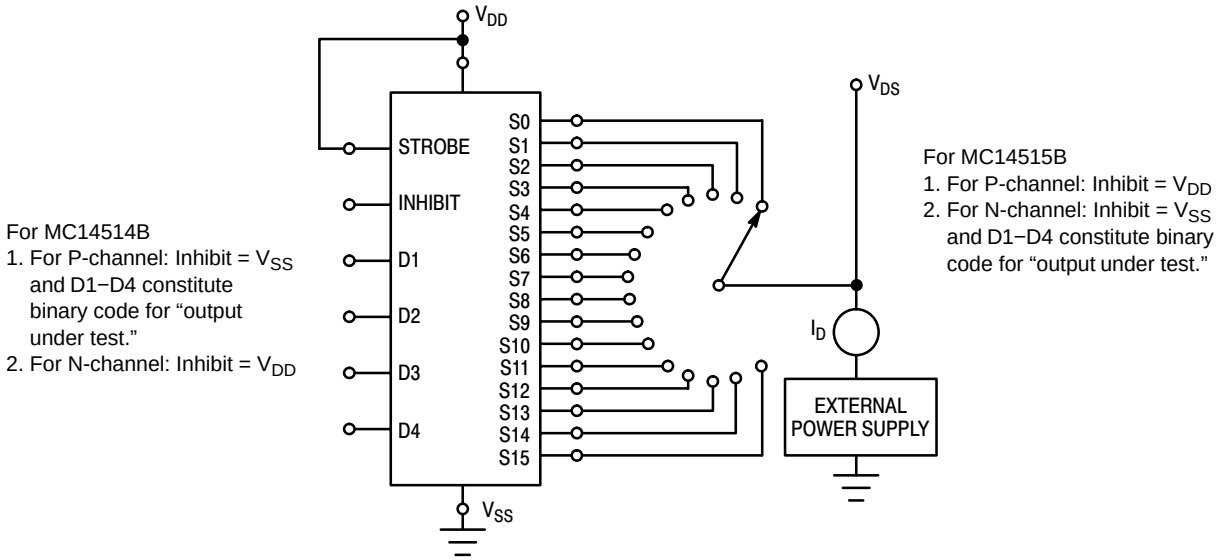

Figure 1. Drain Characteristics Test Circuit

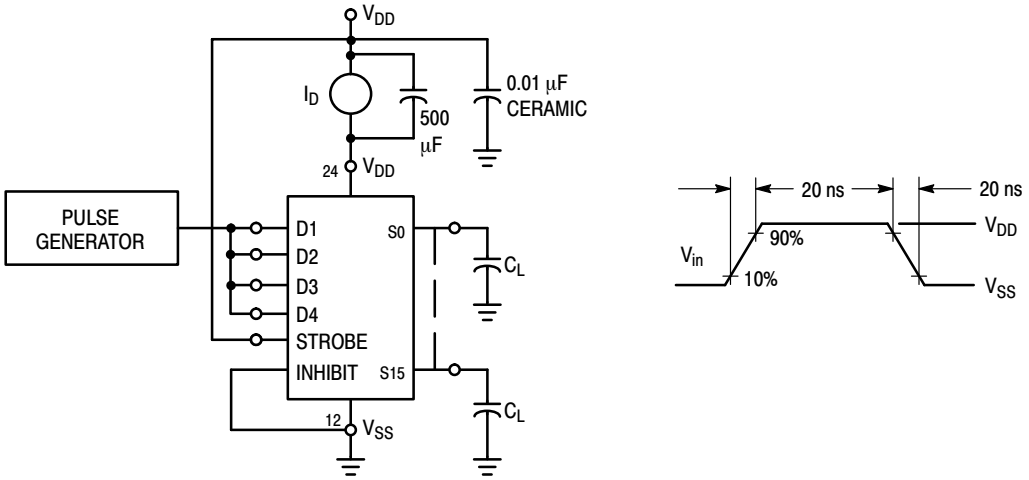

Figure 2. Dynamic Power Dissipation Test Circuit and Waveform

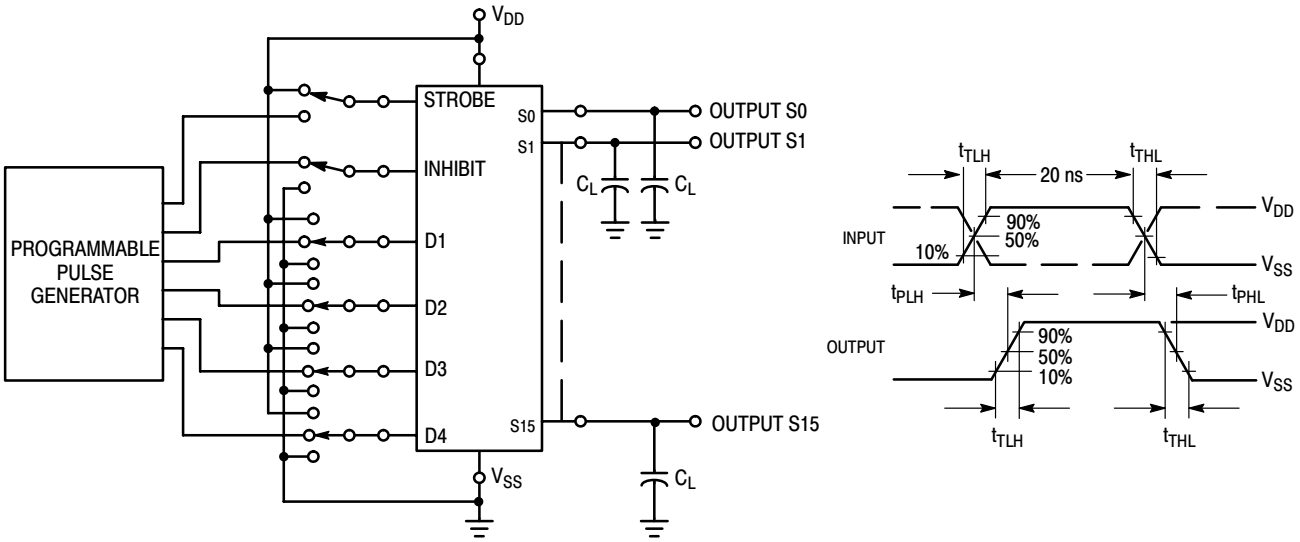

Figure 3. Switching Time Test Circuit and Waveforms

LOGIC DIAGRAM

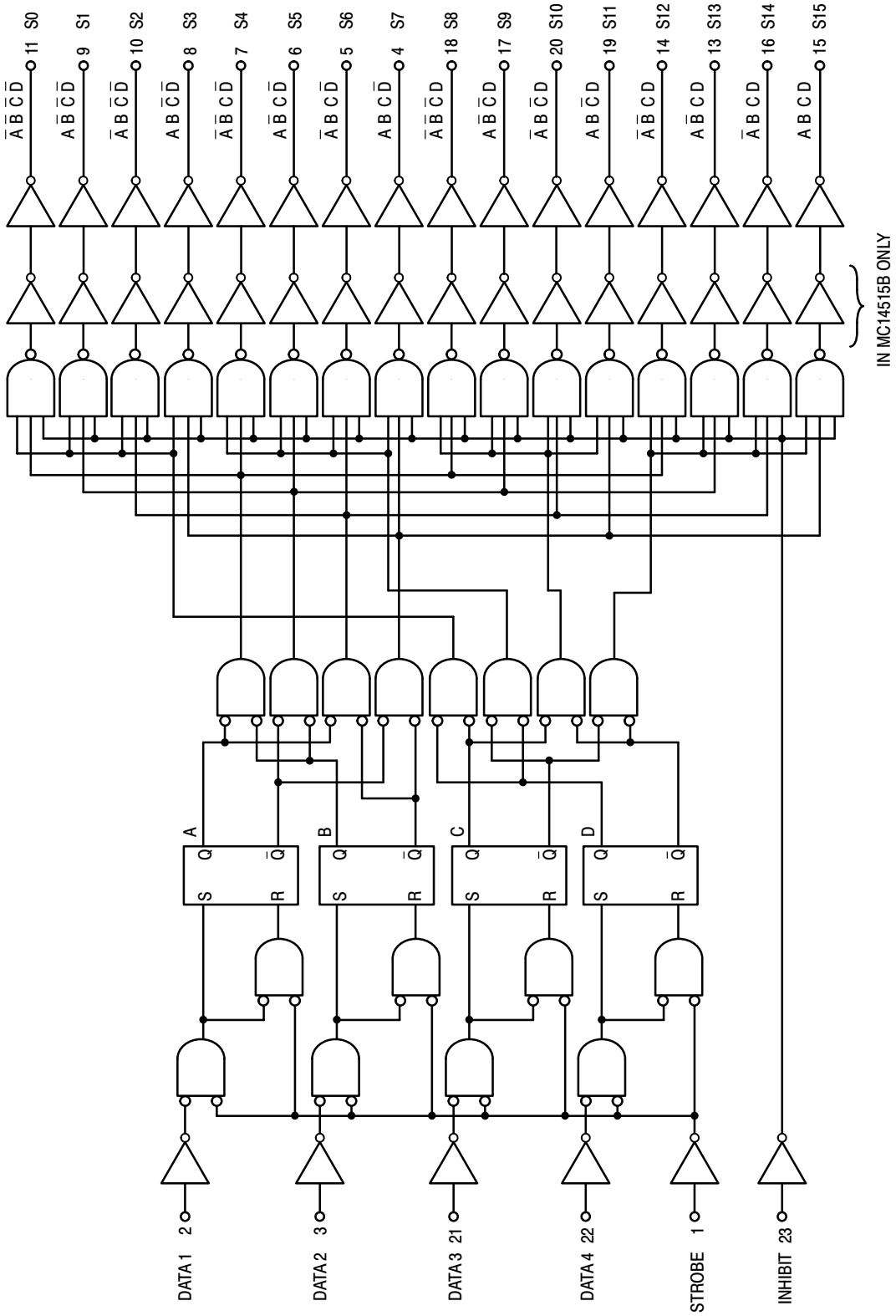

COMPLEX DATA ROUTING

Two MC14512 eight-channel data selectors are used here with the MC14514B four-bit latch/decoder to effect a complex data routing system. A total of 16 inputs from data registers are selected and transferred via a 3-state data bus to a data distributor for rearrangement and entry into 16 output registers. In this way sequential data can be re-routed or intermixed according to patterns determined by data select and distribution inputs.

Data is placed into the routing scheme via the eight inputs on both MC14512 data selectors. One register is assigned to each input. The signals on A0, A1, and A2 choose one of eight inputs for transfer out to the 3-state data bus. A fourth signal, labelled Dis, disables one of the MC14512 selectors, assuring transfer of data from only one register.

In addition to a choice of input registers, 1 thru 16, the rate of transfer of the sequential information can also be varied. That is, if the MC14512 were addressed at a rate that is eight times faster then the shift frequency of the input registers, the most significant bit (MSB) from each register could be selected for transfer to the data bus. Therefore, all of the most significant bits from all of the registers can be transferred to the data bus before the next most significant bit is presented for transfer by the input registers.

Information from the 3-state bus is redistributed by the MC14514B four-bit latch/decoder. Using the four-bit address, D1 thru D4, the information on the inhibit line can be transferred to the addressed output line to the desired output registers, A thru P. This distribution of data bits to the output registers can be made in many complex patterns. For example, all of the most significant bits from the input registers can be routed into output register A, all of the next most significant bits into register B, etc. In this way horizontal, vertical, or other methods of data slicing can be implemented.

DATA ROUTING SYSTEM

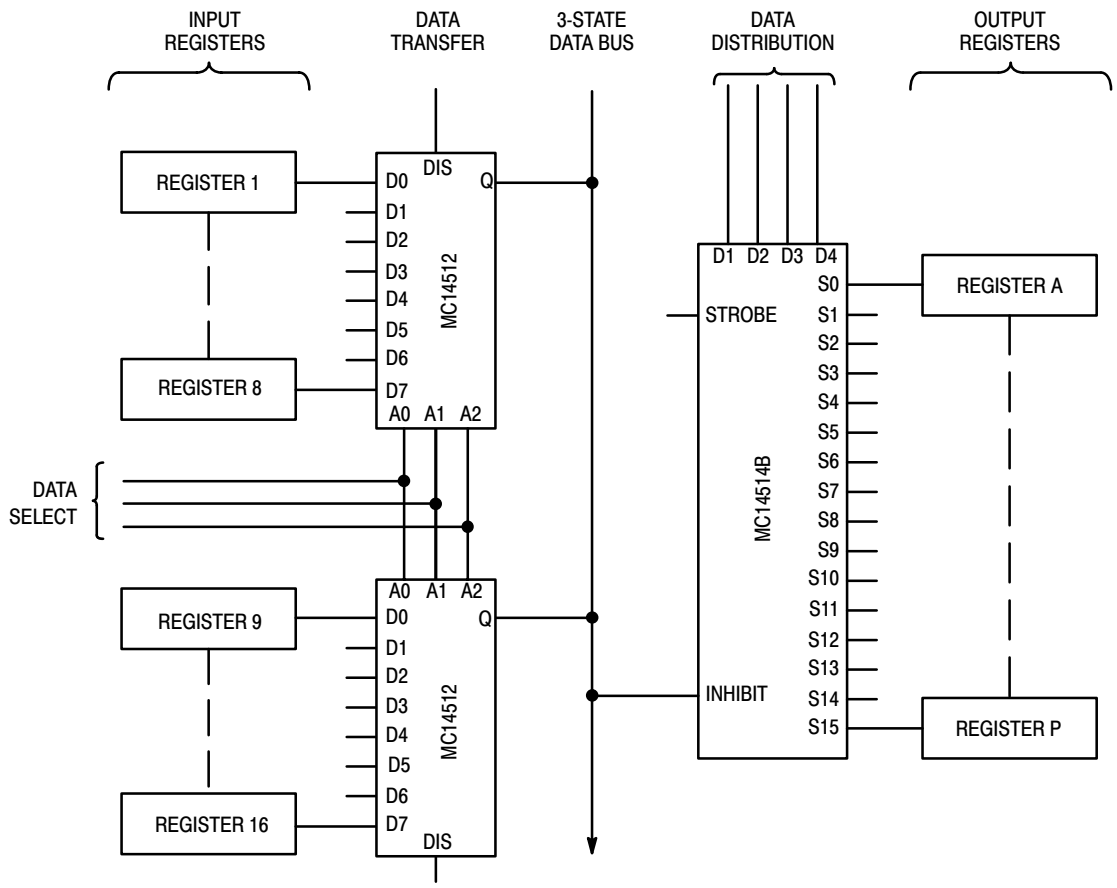

REVISION HISTORY

Revision	Description of Changes	Date
10	Rebranded the Data Sheet to **onsemi** format.	10/3/2025

This document has undergone updates prior to the inclusion of this revision history table. The changes tracked here only reflect updates made on the noted approval dates.

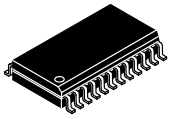

SCALE 1:1

SOIC−24 WB
CASE 751E−04
ISSUE F

DATE 03 JUL 2012

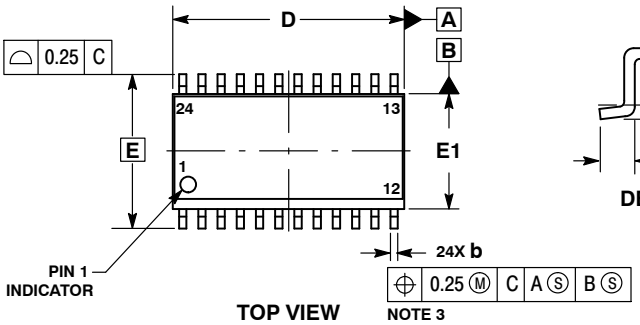

TOP VIEW

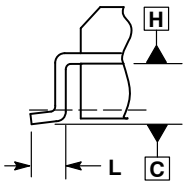

DETAIL A

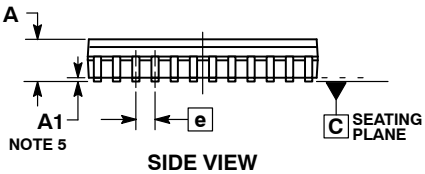

SIDE VIEW

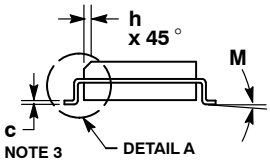

END VIEW

NOTES:
1. DIMENSIONING AND TOLERANCING PER ASME Y14.5M, 1994.
2. CONTROLLING DIMENSION: MILLIMETERS.
3. DIMENSIONS b AND c APPLY TO THE FLAT SECTION OF THE LEAD AND ARE MEASURED BETWEEN 0.10 AND 0.25 FROM THE LEAD TIP.
4. DIMENSIONS D AND E1 DO NOT INCLUDE MOLD FLASH, PROTRUSIONS OR GATE BURRS. MOLD FLASH, PROTRUSIONS OR GATE BURRS SHALL NOT EXCEED 0.15 mm PER SIDE. INTERLEAD FLASH OR PROTRUSION SHALL NOT EXCEED 0.25 PER SIDE. DIMENSIONS D AND E1 ARE DETERMINED AT DATUM H.
5. A1 IS DEFINED AS THE VERTICAL DISTANCE FROM THE SEATING PLANE TO THE LOWEST POINT ON THE PACKAGE BODY.

	MILLIMETERS	
DIM	MIN	MAX
A	2.35	2.65
A1	0.13	0.29
b	0.35	0.49
c	0.23	0.32
D	15.25	15.54
E	10.30 BSC	
E1	7.40	7.60
e	1.27 BSC	
h	0.25	0.75
L	0.41	0.90
M	0 °	8 °

RECOMMENDED SOLDERING FOOTPRINT*

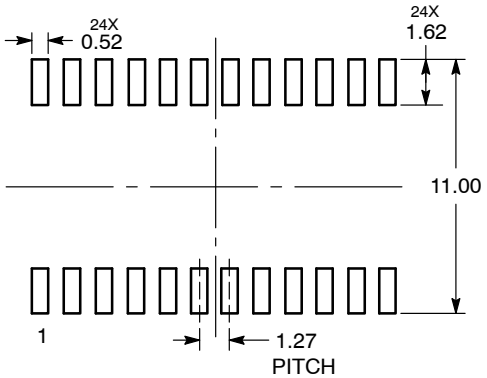

DIMENSIONS: MILLIMETERS

*For additional information on our Pb−Free strategy and soldering details, please download the **onsemi** Soldering and Mounting Techniques Reference Manual, SOLDERRM/D.

GENERIC MARKING DIAGRAM*

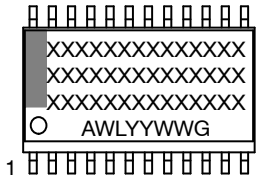

XXXXX = Specific Device Code
A = Assembly Location
WL = Wafer Lot
YY = Year
WW = Work Week
G = Pb−Free Package

*This information is generic. Please refer to device data sheet for actual part marking. Pb−Free indicator, “G” or microdot “▪”, may or may not be present. Some products may not follow the Generic Marking.

DOCUMENT NUMBER:	98ASB42344B	Electronic versions are uncontrolled except when accessed directly from the Document Repository. Printed versions are uncontrolled except when stamped “CONTROLLED COPY” in red.
DESCRIPTION:	SOIC−24 WB	PAGE 1 OF 1

onsemi and onsemi are trademarks of Semiconductor Components Industries, LLC dba **onsemi** or its subsidiaries in the United States and/or other countries. **onsemi** reserves the right to make changes without further notice to any products herein. **onsemi** makes no warranty, representation or guarantee regarding the suitability of its products for any particular purpose, nor does **onsemi** assume any liability arising out of the application or use of any product or circuit, and specifically disclaims any and all liability, including without limitation special, consequential or incidental damages. **onsemi** does not convey any license under its patent rights nor the rights of others.

onsemi, onsemi, and other names, marks, and brands are registered and/or common law trademarks of Semiconductor Components Industries, LLC dba "**onsemi**" or its affiliates and/or subsidiaries in the United States and/or other countries. **onsemi** owns the rights to a number of patents, trademarks, copyrights, trade secrets, and other intellectual property. A listing of **onsemi**'s product/patent coverage may be accessed at www.onsemi.com/site/pdf/Patent−Marking.pdf. **onsemi** reserves the right to make changes at any time to any products or information herein, without notice. The information herein is provided "as−is" and **onsemi** makes no warranty, representation or guarantee regarding the accuracy of the information, product features, availability, functionality, or suitability of its products for any particular purpose, nor does **onsemi** assume any liability arising out of the application or use of any product or circuit, and specifically disclaims any and all liability, including without limitation special, consequential or incidental damages. Buyer is responsible for its products and applications using **onsemi** products, including compliance with all laws, regulations and safety requirements or standards, regardless of any support or applications information provided by **onsemi**. "Typical" parameters which may be provided in **onsemi** data sheets and/or specifications can and do vary in different applications and actual performance may vary over time. All operating parameters, including "Typicals" must be validated for each customer application by customer's technical experts. **onsemi** does not convey any license under any of its intellectual property rights nor the rights of others. **onsemi** products are not designed, intended, or authorized for use as a critical component in life support systems or any FDA Class 3 medical devices or medical devices with a same or similar classification in a foreign jurisdiction or any devices intended for implantation in the human body. Should Buyer purchase or use **onsemi** products for any such unintended or unauthorized application, Buyer shall indemnify and hold **onsemi** and its officers, employees, subsidiaries, affiliates, and distributors harmless against all claims, costs, damages, and expenses, and reasonable attorney fees arising out of, directly or indirectly, any claim of personal injury or death associated with such unintended or unauthorized use, even if such claim alleges that **onsemi** was negligent regarding the design or manufacture of the part. **onsemi** is an Equal Opportunity/Affirmative Action Employer. This literature is subject to all applicable copyright laws and is not for resale in any manner.

ADDITIONAL INFORMATION

TECHNICAL PUBLICATIONS:
Technical Library: www.onsemi.com/design/resources/technical−documentation
onsemi Website: www.onsemi.com

ONLINE SUPPORT: www.onsemi.com/support
For additional information, please contact your local Sales Representative at
www.onsemi.com/support/sales