SN74LXC2T45 Dual-Bit Dual-Supply Bus Transceiver with Configurable Level Shifting

1 Features

- Fully configurable dual-rail design allows each port to operate from 1.1 V to 5.5 V
- Robust, glitch-free power supply sequencing
- Up to 420-Mbps support for 3.3 V to 5.0 V
- Schmitt-trigger inputs allow for slow or noisy inputs
- I/O's with integrated dynamic pull-down resistors help reduce external component count
- Control inputs with integrated static pull-down resistors allow for floating control inputs
- High drive strength (up to 32 mA at 5 V)
- Low power consumption
  - 3-µA maximum (25°C)
  - 6-µA maximum (–40°C to 125°C)
- V_{CC} isolation and V_{CC} disconnect ($I_{off\text{-}float}$) feature
  - If either V_{CC} supply is < 100 mV or disconnected, all I/O's get pulled-down and then become high-impedance
- I_{off} supports partial-power-down mode operation
- Compatible with LVC family level shifters
- Control logic (DIR) are referenced to V_{CCA}
- Operating temperature from –40°C to +125°C
- Latch-up performance exceeds 100 mA per JESD 78, class II
- ESD protection exceeds JESD 22
  - 4000-V human-body model
  - 1000-V charged-device model

2 Applications

- Eliminate slow or noisy input signals
- Driving indicator LEDs or Buzzers
- Debouncing a mechanical switch
- Infotainment head unit
- ADAS fusion

3 Description

The SN74LXC2T45 is a dual-bit, dual-supply noninverting bidirectional voltage level translation device. Ax pins and control pin (DIR) are referenced to V_{CCA} logic levels, and Bx pins are referenced to V_{CCB} logic levels. The A port is able to accept I/O voltages ranging from 1.1 V to 5.5 V, while the B port can accept I/O voltages from 1.1 V to 5.5 V. A high on DIR allows data transmission from A to B and a low on DIR allows data transmission from B to A. See *Device Functional Modes* for a summary of the operation of the control logic.

Device Information(1)

PART NUMBER	PACKAGE	BODY SIZE (NOM)
SN74LXC2T45	SM8 (DCT) (8)(2)	2.95 mm × 2.80 mm
	VSSOP (DCU) (8)	2.30 mm × 2.00 mm
	SON (DTT) (8)	1.95 mm × 1.00 mm
	X2SON (DTM) (8)	1.35 mm × 0.80 mm

(1) For all available packages, see the orderable addendum at the end of the data sheet.
(2) Preview package

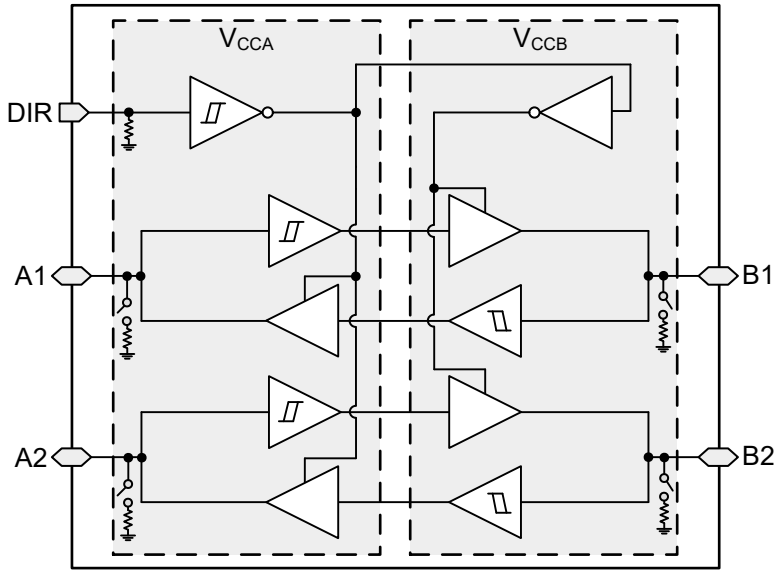

Functional Block Diagram

An IMPORTANT NOTICE at the end of this data sheet addresses availability, warranty, changes, use in safety-critical applications, intellectual property matters and other important disclaimers. PRODUCTION DATA.

Table of Contents

1 Features....1
2 Applications....1
3 Description....1
4 Revision History....2
5 Pin Configuration and Functions....3
6 Specifications....4
6.1 Absolute Maximum Ratings....4
6.2 ESD Ratings....4
6.3 Recommended Operating Conditions....5
6.4 Thermal Information....5
6.5 Electrical Characteristics....6
6.6 Switching Characteristics: T_{sk}, T_{MAX}....9
6.7 Switching Characteristics, V_{CCA} = 1.2 ± 0.1 V....10
6.8 Switching Characteristics, V_{CCA} = 1.5 ± 0.1 V....11
6.9 Switching Characteristics, V_{CCA} = 1.8 ± 0.15 V....12
6.10 Switching Characteristics, V_{CCA} = 2.5 ± 0.2 V....13
6.11 Switching Characteristics, V_{CCA} = 3.3 ± 0.3 V....14
6.12 Switching Characteristics, V_{CCA} = 5.0 ± 0.5 V....15
6.13 Operating Characteristics....16
6.14 Typical Characteristics....17
7 Parameter Measurement Information....18
7.1 Load Circuit and Voltage Waveforms....18
8 Detailed Description....20
8.1 Overview....20
8.2 Functional Block Diagram....20
8.3 Feature Description....21
9 Partial Power Down (I_{off})....21
10 V_{CC} Isolation and V_{CC} Disconnect ($I_{off\text{-}float}$)....21
11 Over-Voltage Tolerant Inputs....22
12 Glitch-Free Power Supply Sequencing....22
13 Negative Clamping Diodes....23
14 Fully Configurable Dual-Rail Design....23
15 Supports High-Speed Translation....23
16 Device Functional Modes....23
17 Application and Implementation....24
17.1 Application Information....24
17.2 Enable Times....24
17.3 Typical Application....24
18 Power Supply Recommendations....25
19 Layout....26
19.1 Layout Guidelines....26
19.2 Layout Example....26
20 Device and Documentation Support....27
20.1 Documentation Support....27
20.2 Receiving Notification of Documentation Updates....27
20.3 Support Resources....27
20.4 Trademarks....27
20.5 Electrostatic Discharge Caution....27
20.6 Glossary....27
21 Mechanical, Packaging, and Orderable Information....27

4 Revision History

NOTE: Page numbers for previous revisions may differ from page numbers in the current version.

Changes from Revision A (October 2021) to Revision B (March 2022)	Page
• Changed the status of the DTT and DTM Package, from: *Preview* to: *Production*	3

Changes from Revision * (October 2021) to Revision A (October 2021)	Page
• Changed status of data sheet from *Advanced Information* to *Production Data*	1

Copyright © 2022 Texas Instruments Incorporated

5 Pin Configuration and Functions

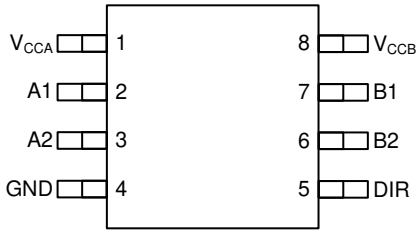

Figure 5-1. DCT (Preview) Package, 8-Pin SM8

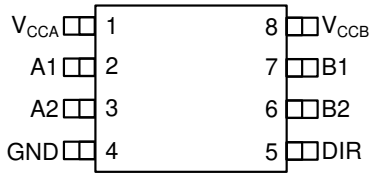

Figure 5-2. DCU Package, 8-Pin VSSOP (Top View)

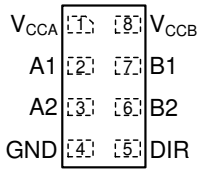

Figure 5-3. DTT Package, 8-Pin SON Transparent (Top View)

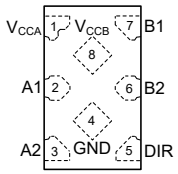

Figure 5-4. DTM Package, 8-Pin X2SON Transparent (Top View)

Table 5-1. Pin Functions

PIN		TYPE[(1)]	DESCRIPTION
NAME	DCT, DCU, DTT, DTM		
A1	2	I/O	Input/output A1. Referenced to V_{CCA}.
A2	3	I/O	Input/output A2. Referenced to V_{CCA}.
B1	7	I/O	Input/output B1. Referenced to V_{CCB}.
B2	6	I/O	Input/output B2. Referenced to V_{CCB}.
DIR	5	I	Direction-control signal for all ports. Referenced to V_{CCA}.
GND	4	I/O	Ground.
V_{CCA}	1	—	A-port supply voltage. 1.1 V ≤ V_{CCA} ≤ 5.5 V.
V_{CCB}	8	—	B-port supply voltage. 1.1 V ≤ V_{CCB} ≤ 5.5 V.

(1) I = input, O = output

6 Specifications

6.1 Absolute Maximum Ratings

over operating free-air temperature range (unless otherwise noted)[1]

			MIN	MAX	UNIT
V_{CCA}	Supply voltage A		–0.5	6.5	V
V_{CCB}	Supply voltage B		–0.5	6.5	V
V_I	Input Voltage[2]	I/O Ports (A Port)	–0.5	6.5	V
		I/O Ports (B Port)	–0.5	6.5	
		Control Inputs	–0.5	6.5	
V_O	Voltage applied to any output in the high-impedance or power-off state[2]	A Port	–0.5	6.5	V
		B Port	–0.5	6.5	
V_O	Voltage applied to any output in the high or low state[2] [3]	A Port	–0.5	V_{CCA} + 0.5	V
		B Port	–0.5	V_{CCB} + 0.5	
I_{IK}	Input clamp current	V_I < 0	–50		mA
I_{OK}	Output clamp current	V_O < 0	–50		mA
I_O	Continuous output current		–50	50	mA
	Continuous current through V_{CC} or GND		–200	200	mA
T_j	Junction Temperature			150	°C
T_{stg}	Storage temperature		–65	150	°C

(1) Stresses beyond those listed under *Absolute Maximum Ratings* may cause permanent damage to the device. These are stress ratings only, which do not imply functional operation of the device at these or any other conditions beyond those indicated under *Recommended Operating Conditions*. Exposure beyond the limits listed in *Recommended Operating Conditions*. may affect device reliability.
(2) The input voltage and output negative-voltage ratings may be exceeded if the input and output current ratings are observed.
(3) The output positive-voltage rating may be exceeded up to 6.5 V maximum if the output current rating is observed.

6.2 ESD Ratings

			VALUE	UNIT
$V_{(ESD)}$	Electrostatic discharge	Human body model (HBM), per ANSI/ESDA/JEDEC JS-001[1]	±4000	V
		Charged device model (CDM), per ANSI/ESDA/JEDEC JS-002[2]	±1000	

(1) JEDEC document JEP155 states that 500-V HBM allows safe manufacturing with a standard ESD control process.
(2) JEDEC document JEP157 states that 250-V CDM allows safe manufacturing with a standard ESD control process.

Copyright © 2022 Texas Instruments Incorporated

6.3 Recommended Operating Conditions

over operating free-air temperature range (unless otherwise noted) [(1) (2) (3)]

			MIN	MAX	UNIT
V_{CCA}	Supply voltage A		1.1	5.5	V
V_{CCB}	Supply voltage B		1.1	5.5	V
I_{OH}	High-level output current	V_{CCO} = 1.1 V		–0.1	mA
		V_{CCO} = 1.4 V		–4	
		V_{CCO} = 1.65 V		–8	
		V_{CCO} = 2.3 V		–12	
		V_{CCO} = 3 V		–24	
		V_{CCO} = 4.5 V		–32	
I_{OL}	Low-level output current	V_{CCO} = 1.1 V		0.1	mA
		V_{CCO} = 1.4 V		4	
		V_{CCO} = 1.65 V		8	
		V_{CCO} = 2.3 V		12	
		V_{CCO} = 3 V		24	
		V_{CCO} = 4.5 V		32	
V_I	Input voltage [(3)]		0	5.5	V
V_O	Output voltage	Active State	0	V_{CCO}	V
		Tri-State	0	5.5	
T_A	Operating free-air temperature		–40	125	°C

(1) V_{CCI} is the V_{CC} associated with the input port.
(2) V_{CCO} is the V_{CC} associated with the output port.
(3) All control inputs and data I/Os of this device have weak pulldowns to ensure the line is not floating when undefined external to the device. The input leakage from these weak pulldowns is defined by the I_I specification indicated under Electrical Characteristics

6.4 Thermal Information

THERMAL METRIC[(1)]		SN74LXC2T45				UNIT
		DCT (SM8)	DCU (VSSOP)	DTT (SON)	DTM (X2SON)	
		8 PINS	8 PINS	8 PINS	8 PINS	
$R_{\theta JA}$	Junction-to-ambient thermal resistance	TBD	247.7	209.0	205.7	°C/W
$R_{\theta JC(top)}$	Junction-to-case (top) thermal resistance	TBD	96.7	139.3	120.6	°C/W
$R_{\theta JB}$	Junction-to-board thermal resistance	TBD	159.1	107.5	121.1	°C/W
Y_{JT}	Junction-to-top characterization parameter	TBD	38.2	16.6	7.6	°C/W
Y_{JB}	Junction-to-board characterization parameter	TBD	158.2	107.3	120.9	°C/W

(1) For more information about traditional and new thermal metrics, see the Semiconductor and IC Package Thermal Metrics application report.

Copyright © 2022 Texas Instruments Incorporated

6.5 Electrical Characteristics

over operating free-air temperature range (unless otherwise noted)[(1) (2)]

PARAMETER		TEST CONDITIONS	V_{CCA}	V_{CCB}	Operating free-air temperature (T_A)									UNIT
					25°C			–40°C to 85°C			–40°C to 125°C			
					MIN	TYP	MAX	MIN	TYP	MAX	MIN	TYP	MAX	
V_{T+}	Positive-going input-threshold voltage	Data Inputs (Ax, Bx) (Referenced to V_{CCI})	1.1 V	1.1 V				0.44		0.88	0.44		0.88	V
			1.4 V	1.4 V				0.60		0.98	0.60		0.98	
			1.65 V	1.65 V				0.76		1.13	0.76		1.13	
			2.3 V	2.3 V				1.08		1.56	1.08		1.56	
			3 V	3 V				1.48		1.92	1.48		1.92	
			4.5 V	4.5 V				2.19		2.74	2.19		2.74	
			5.5 V	5.5 V				2.65		3.33	2.65		3.33	
		Control Input (DIR) (Referenced to V_{CCA})	1.1 V	1.1 V				0.44		0.88	0.44		0.88	V
			1.4 V	1.4 V				0.60		0.98	0.60		0.98	
			1.65 V	1.65 V				0.76		1.13	0.76		1.13	
			2.3 V	2.3 V				1.08		1.56	1.08		1.56	
			3 V	3 V				1.48		1.92	1.48		1.92	
			4.5 V	4.5 V				2.19		2.74	2.19		2.74	
			5.5 V	5.5 V				2.65		3.33	2.65		3.33	
V_{T-}	Negative-going input-threshold voltage	Data Inputs (Ax, Bx) (Referenced to V_{CCI})	1.1 V	1.1 V				0.17		0.48	0.17		0.48	V
			1.4 V	1.4 V				0.28		0.59	0.28		0.59	
			1.65 V	1.65 V				0.35		0.69	0.35		0.69	
			2.3 V	2.3 V				0.56		0.97	0.56		0.97	
			3 V	3 V				0.89		1.5	0.89		1.5	
			4.5 V	4.5 V				1.51		1.97	1.51		1.97	
			5.5 V	5.5 V				1.88		2.4	1.88		2.4	
		Control Input (DIR) (Referenced to V_{CCA})	1.1 V	1.1 V				0.17		0.48	0.17		0.48	V
			1.4 V	1.4 V				0.28		0.6	0.28		0.6	
			1.65 V	1.65 V				0.35		0.71	0.35		0.71	
			2.3 V	2.3 V				0.56		1	0.56		1	
			3 V	3 V				0.89		1.5	0.89		1.5	
			4.5 V	4.5 V				1.51		2	1.51		2	
			5.5 V	5.5 V				1.88		2.46	1.88		2.46	
ΔV_T	Input-threshold hysteresis ($V_{T+} – V_{T-}$)	Data Inputs (Ax, Bx) (Referenced to V_{CCI})	1.1 V	1.1 V				0.2		0.4	0.2		0.4	V
			1.4 V	1.4 V				0.25		0.5	0.25		0.5	
			1.65 V	1.65 V				0.3		0.55	0.3		0.55	
			2.3 V	2.3 V				0.38		0.65	0.38		0.65	
			3 V	3 V				0.46		0.72	0.46		0.72	
			4.5 V	4.5 V				0.58		0.93	0.58		0.93	
			5.5 V	5.5 V				0.69		1.06	0.69		1.06	
		Control Input (DIR) (Referenced to V_{CCA})	1.1 V	1.1 V				0.2		0.4	0.2		0.4	V
			1.4 V	1.4 V				0.25		0.5	0.25		0.5	
			1.65 V	1.65 V				0.3		0.55	0.3		0.55	
			2.3 V	2.3 V				0.38		0.65	0.38		0.65	
			3 V	3 V				0.46		0.72	0.46		0.72	
			4.5 V	4.5 V				0.58		0.93	0.58		0.93	
			5.5 V	5.5 V				0.69		1.06	0.69		1.06	

Copyright © 2022 Texas Instruments Incorporated

6.5 Electrical Characteristics (continued)

over operating free-air temperature range (unless otherwise noted)[1] [2]

PARAMETER		TEST CONDITIONS	V_{CCA}	V_{CCB}	Operating free-air temperature (T_A)									UNIT
					25°C			–40°C to 85°C			–40°C to 125°C			
					MIN	TYP	MAX	MIN	TYP	MAX	MIN	TYP	MAX	
V_{OH}	High-level output voltage [3]	I_{OH} = –100 µA	1.1 V – 5.5 V	1.1 V – 5.5 V				V_{CCO} – 0.1			V_{CCO} – 0.1			V
		I_{OH} = –4 mA	1.4 V	1.4 V				1			1			
		I_{OH} = –8 mA	1.65 V	1.65 V				1.2			1.2			
		I_{OH} = –12 mA	2.3 V	2.3 V				1.9			1.9			
		I_{OH} = –24 mA	3 V	3 V				2.4			2.4			
		I_{OH} = –32 mA	4.5 V	4.5 V				3.8			3.8			
V_{OL}	Low-level output voltage [4]	I_{OL} = 100 µA	1.1 V – 5.5 V	1.1 V – 5.5 V						0.1			0.1	V
		I_{OL} = 4 mA	1.4 V	1.4 V						0.3			0.3	
		I_{OL} = 8 mA	1.65 V	1.65 V						0.45			0.45	
		I_{OL} = 12 mA	2.3 V	2.3 V						0.3			0.3	
		I_{OL} = 24 mA	3 V	3 V						0.55			0.55	
		I_{OL} = 32 mA	4.5 V	4.5 V						0.55			0.55	
I_I	Input leakage current	Control input (DIR) V_I = V_{CCA} or GND	1.1 V – 5.5 V	1.1 V – 5.5 V	-0.1		1	-0.1		2	-0.1		2	µA
		Data Inputs [5] (Ax, Bx) V_I = V_{CCI} or GND	1.1 V – 5.5 V	1.1 V – 5.5 V	–0.3		1	–1		1	–2		2	µA
I_{off}	Partial power down current	A Port or B Port V_I or V_O = 0 V – 5.5 V	0 V	0 V – 5.5 V	–1		1	–2		2	–2.5		2.5	µA
			0 V – 5.5 V	0 V	–1		1	–2		2	–2.5		2.5	
$I_{off\text{-}float}$	Floating supply Partial power down current	A Port or B Port V_I or V_O = GND	Floating [6]	0 V – 5.5 V	–1.5		1.5	–2		2	–2.5		2.5	µA
			0 V – 5.5 V	Floating [6]	–1.5		1.5	–2		2	–2.5		2.5	
I_{CCA}	V_{CCA} supply current	V_I = V_{CCI} or GND I_O = 0	1.1 V – 5.5 V	1.1 V – 5.5 V			2			3			6	µA
			0 V	5.5 V	–0.2			–0.5			–1			
			5.5 V	0 V			1			2			4	
		V_I = GND I_O = 0	5.5 V	Floating [6]			2			3			6	
I_{CCB}	V_{CCB} supply current	V_I = V_{CCI} or GND I_O = 0	1.1 V – 5.5 V	1.1 V – 5.5 V			2			3			6	µA
			0 V	5.5 V			1			2			4	
			5.5 V	0 V	–0.2			–0.5			–1			
		V_I = GND I_O = 0	Floating [6]	5.5 V			2			3			6	
I_{CCA} + I_{CCB}	Combined supply current	V_I = V_{CCI} or GND I_O = 0	1.1 V – 5.5 V	1.1 V – 5.5 V			3			4			6	µA

6.5 Electrical Characteristics (continued)

over operating free-air temperature range (unless otherwise noted)[(1) (2)]

PARAMETER		TEST CONDITIONS	V_{CCA}	V_{CCB}	Operating free-air temperature (T_A)									UNIT
					25°C			–40°C to 85°C			–40°C to 125°C			
					MIN	TYP	MAX	MIN	TYP	MAX	MIN	TYP	MAX	
ΔI_{CCA}	V_{CCA} additional supply current per input	Control input (DIR): $V_I = V_{CCA} – 0.6$ V A port = VCCA or GND B Port = open	3.0 V – 5.5 V	3.0 V – 5.5 V						50			75	µA
		A Port: $V_I = V_{CCA} – 0.6$ V DIR = V_{CCA}, B Port = open	3.0 V – 5.5 V	3.0 V – 5.5 V						50			75	
ΔI_{CCB}	V_{CCB} additional supply current per input	B Port: $V_I = V_{CCB}$ - 0.6 V DIR = GND, A Port = open	3.0 V – 5.5 V	3.0 V – 5.5 V						50			75	µA
C_i	Control Input Capacitance	V_I = 3.3 V or GND	3.3 V	3.3 V		2.2				5			5	pF
C_{io}	Data I/O Capacitance	V_{CCO} = 0V V_O = 1.65 V DC +1 MHz -16 dBm sine wave	3.3 V	3.3 V		4.4				10			10	pF

(1) V_{CCI} is the V_{CC} associated with the input port.
(2) V_{CCO} is the V_{CC} associated with the output port.
(3) Tested at $V_I = V_{T+(MAX)}$
(4) Tested at $V_I = V_{T-(MIN)}$
(5) For I/O ports, the parameter I_I includes the I_{OZ} current.
(6) Floating is defined as a node that is both not actively driven by an external device and has leakage not exeeding 10 nA.

Copyright © 2022 Texas Instruments Incorporated

6.6 Switching Characteristics: T_{sk}, T_{MAX}

over operating free-air temperature range (unless otherwise noted)

PARAMETER	TEST CONDITIONS		V_{CCI}	V_{CCO}	Operating free-air temperature (T_A) -40°C to 125°C MIN	TYP	MAX	UNIT
T_{MAX} - Maximum Data Rate	50% Duty Cycle Input One channel switching 20% of pulse > 0.7*V_{CCO} 20% of pulse < 0.3*V_{CCO}	Up Translation	3.0 V – 3.6 V	4.5 V – 5.5 V	200	420		Mbps
			2.25 V – 2.75 V	4.5 V – 5.5 V	150	300		
			1.65 V – 1.95 V	4.5 V – 5.5 V	100	200		
			1.1 V – 1.3 V	4.5 V – 5.5 V	20	40		
			1.65 V – 1.95 V	3.0 V – 3.6 V	100	210		
			1.1 V – 1.3 V	3.0 V – 3.6 V	10	20		
			1.1 V – 1.3 V	1.65 V – 1.95 V	5	10		
		Down Translation	4.5 V – 5.5 V	3.0 V – 3.6 V	100	210		
			4.5 V – 5.5 V	2.25 V – 2.75 V	75	140		
			4.5 V – 5.5 V	1.65 V – 1.95 V	50	75		
			4.5 V – 5.5 V	1.1 V – 1.3 V	15	30		
			3.0 V – 3.6 V	1.65 V – 1.95 V	40	75		
			3.0 V – 3.6 V	1.1 V – 1.3 V	10	20		
			1.65 V – 1.95 V	1.1 V – 1.3 V	5	10		
t_{sk} - Output skew	Timing skew between any two switching outputs within the same device	Up Translation	3.0 V – 3.6 V	4.5 V – 5.5 V			0.2	ns
			1.65 V – 1.95 V	4.5 V – 5.5 V			0.5	
			1.1 V – 1.3 V	4.5 V – 5.5 V			3.5	
			1.65 V – 1.95 V	3.0 V – 3.6 V			0.5	
			1.1 V – 1.3 V	3.0 V – 3.6 V			3.5	
			1.1 V – 1.3 V	1.65 V – 1.95 V			2.5	
		Down Translation	4.5 V – 5.5 V	3.0 V – 3.6 V			0.2	
			4.5 V – 5.5 V	1.65 V – 1.95 V			0.5	
			4.5 V – 5.5 V	1.1 V – 1.3 V			2	
			3.0 V – 3.6 V	1.65 V – 1.95 V			0.5	
			3.0 V – 3.6 V	1.1 V – 1.3 V			2	
			1.65 V – 1.95 V	1.1 V – 1.3 V			2	

Copyright © 2022 Texas Instruments Incorporated

6.7 Switching Characteristics, V_{CCA} = 1.2 ± 0.1 V

See Figure 7-1 and Table 7-1 for test circuit and loading. See Figure 7-2, Figure 7-3, and Figure 7-4 for measurement waveforms.

PARAMETER		FROM	TO	Test Conditions	B-Port Supply Voltage (V_{CCB})																		UNIT
					1.2 ± 0.1 V			1.5 ± 0.1 V			1.8 ± 0.15 V			2.5 ± 0.2 V			3.3 ± 0.3 V			5.0 ± 0.5 V			
					MIN	TYP	MAX	MIN	TYP	MAX	MIN	TYP	MAX	MIN	TYP	MAX	MIN	TYP	MAX	MIN	TYP	MAX	
t_{pd}	Propagation delay	A	B	-40°C to 85°C	1		84	1		40	1		35	1		32	1		33	1		47	ns
				-40°C to 125°C	1		54	1		36	1		32	1		29	1		29	1		33	
		B	A	-40°C to 85°C	1		84	1		70	1		66	1		59	1		56	1		57	
				-40°C to 125°C	1		54	1		46	1		43	1		37	1		36	1		35	
t_{dis}	Disable time	DIR	A	-40°C to 85°C	6		84	6		63	6		63	6		63	6		63	6		63	ns
				-40°C to 125°C	8		52	8		52	8		52	8		52	8		52	8		52	
		DIR	B	-40°C to 85°C	13		95	10		56	9		50	7		63	6		63	6		42	
				-40°C to 125°C	19		82	16		57	15		52	12		44	12		43	10		42	
t_{en}	Enable time	DIR	A	-40°C to 85°C	24		158	19		117	17		106	15		93	15		91	14		92	ns
				-40°C to 125°C	31		131	27		98	25		88	21		77	20		74	19		72	
		DIR	B	-40°C to 85°C	16		126	14		97	13		93	12		90	12		91	12		105	
				-40°C to 125°C	20		102	18		83	17		78	16		73	16		72	15		75	

Copyright © 2022 Texas Instruments Incorporated

6.8 Switching Characteristics, V_{CCA} = 1.5 ± 0.1 V

See Figure 7-1 and Table 7-1 for test circuit and loading. See Figure 7-2, Figure 7-3, and Figure 7-4 for measurement waveforms.

PARAMETER		FROM	TO	Test Conditions	B-Port Supply Voltage (V_{CCB})																		UNIT
					1.2 ± 0.1 V			1.5 ± 0.1 V			1.8 ± 0.15 V			2.5 ± 0.2 V			3.3 ± 0.3 V			5.0 ± 0.5 V			
					MIN	TYP	MAX	MIN	TYP	MAX	MIN	TYP	MAX	MIN	TYP	MAX	MIN	TYP	MAX	MIN	TYP	MAX	
t_{pd}	Propagation delay	A	B	-40°C to 85°C	1		70	1		29	1		24	1		20	1		19	1		19	ns
				-40°C to 125°C	1		46	1		29	1		24	1		21	1		19	1		20	
		B	A	-40°C to 85°C	1		39	1		29	1		26	1		23	1		21	1		21	
				-40°C to 125°C	1		36	1		29	1		26	1		23	1		21	1		21	
t_{dis}	Disable time	DIR	A	-40°C to 85°C	3		29	3		29	3		29	3		29	3		29	3		29	ns
				-40°C to 125°C	5		29	5		29	5		29	5		29	5		29	5		29	
		DIR	B	-40°C to 85°C	11		78	8		45	7		38	5		31	5		30	4		28	
				-40°C to 125°C	17		70	14		46	11		40	10		32	9		31	8		29	
t_{en}	Enable time	DIR	A	-40°C to 85°C	19		113	15		69	13		59	11		49	11		46	9		44	ns
				-40°C to 125°C	27		101	23		70	21		61	18		51	17		48	15		45	
		DIR	B	-40°C to 85°C	12		91	10		53	9		48	8		43	8		41	7		41	
				-40°C to 125°C	16		71	14		54	13		49	12		44	12		42	11		42	

Copyright © 2022 Texas Instruments Incorporated

6.9 Switching Characteristics, V_{CCA} = 1.8 ± 0.15 V

See Figure 7-1 and Table 7-1 for test circuit and loading. See Figure 7-2, Figure 7-3, and Figure 7-4 for measurement waveforms.

PARAMETER		FROM	TO	Test Conditions	B-Port Supply Voltage (V_{CCB})																		UNIT
					1.2 ± 0.1 V			1.5 ± 0.1 V			1.8 ± 0.15 V			2.5 ± 0.2 V			3.3 ± 0.3 V			5.0 ± 0.5 V			
					MIN	TYP	MAX	MIN	TYP	MAX	MIN	TYP	MAX	MIN	TYP	MAX	MIN	TYP	MAX	MIN	TYP	MAX	
t_{pd}	Propagation delay	A	B	-40°C to 85°C	1		66	1		26	1		21	1		17	1		16	1		15	ns
				-40°C to 125°C	1		43	1		27	1		22	1		18	1		17	1		16	
		B	A	-40°C to 85°C	1		35	1		24	1		21	1		18	1		17	1		17	
				-40°C to 125°C	1		32	1		24	1		22	1		19	1		18	1		17	
t_{dis}	Disable time	DIR	A	-40°C to 85°C	2		22	2		22	2		23	2		23	2		22	2		22	ns
				-40°C to 125°C	4		23	4		31	4		23	4		23	4		23	4		23	
		DIR	B	-40°C to 85°C	9		73	7		40	6		34	4		27	4		25	3		23	
				-40°C to 125°C	15		64	13		42	11		36	6		28	8		27	6		25	
t_{en}	Enable time	DIR	A	-40°C to 85°C	17		103	13		59	12		50	9		40	9		38	7		35	ns
				-40°C to 125°C	23		90	21		61	19		53	16		43	12		39	12		37	
		DIR	B	-40°C to 85°C	11		80	9		44	8		39	7		34	6		33	6		32	
				-40°C to 125°C	14		61	12		45	11		40	10		36	10		34	9		35	

Copyright © 2022 Texas Instruments Incorporated

6.10 Switching Characteristics, V_{CCA} = 2.5 ± 0.2 V

See Figure 7-1 and Table 7-1 for test circuit and loading. See Figure 7-2, Figure 7-3, and Figure 7-4 for measurement waveforms.

PARAMETER		FROM	TO	Test Conditions	B-Port Supply Voltage (V_{CCB})																		UNIT
					1.2 ± 0.1 V			1.5 ± 0.1 V			1.8 ± 0.15 V			2.5 ± 0.2 V			3.3 ± 0.3 V			5.0 ± 0.5 V			
					MIN	TYP	MAX	MIN	TYP	MAX	MIN	TYP	MAX	MIN	TYP	MAX	MIN	TYP	MAX	MIN	TYP	MAX	
t_{pd}	Propagation delay	A	B	-40°C to 85°C	1		59	1		23	1		19	1		15	1		13	1		12	ns
				-40°C to 125°C	1		38	1		23	1		19	1		15	1		14	1		13	
		B	A	-40°C to 85°C	1		32	1		20	1		17	1		15	1		14	1		13	
				-40°C to 125°C	1		29	1		21	1		18	1		15	1		14	1		14	
t_{dis}	Disable time	DIR	A	-40°C to 85°C	1		16	1		23	1		16	1		16	1		20	1		16	ns
				-40°C to 125°C	2		16	2		16	2		16	2		25	2		16	2		16	
		DIR	B	-40°C to 85°C	8		63	6		35	5		29	3		23	3		22	2		19	
				-40°C to 125°C	13		56	10		37	10		31	8		25	7		23	5		20	
t_{en}	Enable time	DIR	A	-40°C to 85°C	14		91	11		49	10		41	8		33	7		30	6		27	ns
				-40°C to 125°C	21		76	18		51	16		44	14		35	13		32	10		29	
		DIR	B	-40°C to 85°C	8		67	6		33	5		33	4		25	4		24	4		23	
				-40°C to 125°C	11		49	9		34	8		30	7		27	7		27	6		24	

Copyright © 2022 Texas Instruments Incorporated

6.11 Switching Characteristics, V_{CCA} = 3.3 ± 0.3 V

See Figure 7-1 and Table 7-1 for test circuit and loading. See Figure 7-2, Figure 7-3, and Figure 7-4 for measurement waveforms.

PARAMETER		FROM	TO	Test Conditions	B-Port Supply Voltage (V_{CCB})																		UNIT
					1.2 ± 0.1 V			1.5 ± 0.1 V			1.8 ± 0.15 V			2.5 ± 0.2 V			3.3 ± 0.3 V			5.0 ± 0.5 V			
					MIN	TYP	MAX	MIN	TYP	MAX	MIN	TYP	MAX	MIN	TYP	MAX	MIN	TYP	MAX	MIN	TYP	MAX	
t_{pd}	Propagation delay	A	B	-40°C to 85°C	1		57	1		21	1		17	1		14	1		12	1		11	ns
				-40°C to 125°C	1		36	1		22	1		18	1		14	1		13	1		12	
		B	A	-40°C to 85°C	1		33	1		19	1		16	1		13	1		12	1		12	
				-40°C to 125°C	1		29	1		19	1		17	1		14	1		13	1		12	
t_{dis}	Disable time	DIR	A	-40°C to 85°C	1		14	1		14	1		14	1		14	1		20	1		14	ns
				-40°C to 125°C	1		34	1		15	1		15	1		15	1		15	1		17	
		DIR	B	-40°C to 85°C	7		59	5		32	5		27	3		21	3		20	2		18	
				-40°C to 125°C	12		52	9		33	9		29	7		23	7		22	5		19	
t_{en}	Enable time	DIR	A	-40°C to 85°C	13		86	10		44	9		37	7		30	7		28	5		25	ns
				-40°C to 125°C	19		71	16		46	14		39	12		32	12		29	10		26	
		DIR	B	-40°C to 85°C	8		64	6		30	5		27	4		23	4		22	3		22	
				-40°C to 125°C	10		46	9		31	8		28	7		24	6		23	6		22	

Copyright © 2022 Texas Instruments Incorporated

6.12 Switching Characteristics, V_{CCA} = 5.0 ± 0.5 V

See Figure 7-1 and Table 7-1 for test circuit and loading. See Figure 7-2, Figure 7-3, and Figure 7-4 for measurement waveforms.

PARAMETER		FROM	TO	Test Conditions	B-Port Supply Voltage (V_{CCB})																		UNIT
					1.2 ± 0.1 V			1.5 ± 0.1 V			1.8 ± 0.15 V			2.5 ± 0.2 V			3.3 ± 0.3 V			5.0 ± 0.5 V			
					MIN	TYP	MAX	MIN	TYP	MAX	MIN	TYP	MAX	MIN	TYP	MAX	MIN	TYP	MAX	MIN	TYP	MAX	
t_{pd}	Propagation delay	A	B	-40°C to 85°C	1		57	1		21	1		17	1		13	1		12	1		11	ns
				-40°C to 125°C	1		36	1		21	1		17	1		14	1		12	1		11	
		B	A	-40°C to 85°C	1		47	1		19	1		15	1		12	1		11	1		11	
				-40°C to 125°C	1		33	1		20	1		16	1		13	1		12	1		11	
t_{dis}	Disable time	DIR	A	-40°C to 85°C	1		12	1		12	1		21	1		12	1		15	1		12	ns
				-40°C to 125°C	1		12	1		12	1		20	1		12	1		12	1		12	
		DIR	B	-40°C to 85°C	1		57	1		30	4		25	3		20	3		19	2		17	
				-40°C to 125°C	11		50	9		31	8		27	6		21	6		20	4		18	
t_{en}	Enable time	DIR	A	-40°C to 85°C	8		98	6		42	8		34	7		27	7		25	5		23	ns
				-40°C to 125°C	18		73	15		44	13		36	11		29	11		27	9		24	
		DIR	B	-40°C to 85°C	6		62	4		28	3		24	3		20	2		19	2		18	
				-40°C to 125°C	9		43	7		28	6		25	5		21	4		20	4		19	

Copyright © 2022 Texas Instruments Incorporated

6.13 Operating Characteristics

T_A = 25°C [1]

PARAMETER		TEST CONDITIONS	SUPPLY VOLTAGE (V_{CCB} = V_{CCA})						UNIT
			1.2 ± 0.1V	1.5 ± 0.1V	1.8 ± 0.15V	2.5 ± 0.2V	3.3 ± 0.3V	5.0 ± 0.5V	
			TYP	TYP	TYP	TYP	TYP	TYP	
C_{pdA} [2]	A to B	A Port CL = 0, RL = Open f = 10 MHz t_{rise} = t_{fall} = 1 ns	3	3	3	3.5	3.5	4.2	pF
	B to A		17	17	17	18	20	22	
C_{pdB} [3]	A to B	B Port CL = 0, RL = Open f = 10 MHz t_{rise} = t_{fall} = 1 ns	17	17	17	18	20	22	pF
	B to A		3	3	3	3.5	3.5	4.2	

(1) For additional information about how power dissipation capacitance affects power consumption, see the CMOS Power Consumption and C_{pd} Calculation application report.
(2) A-Port power dissipation capacitance per transceiver.
(3) B-Port power dissipation capacitance per transceiver.

Copyright © 2022 Texas Instruments Incorporated

6.14 Typical Characteristics

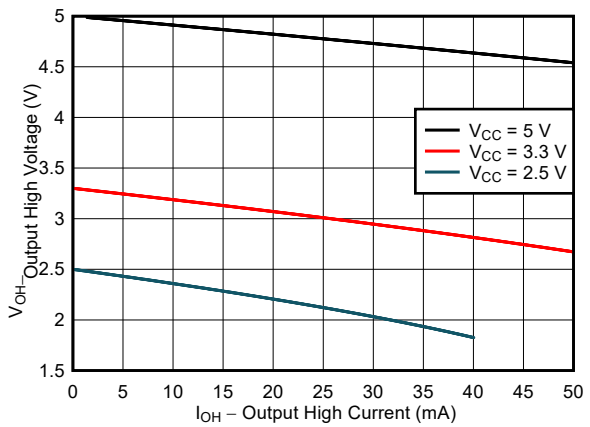

Figure 6-1. Typical (T_A=25°C) Output High Voltage (V_{OH}) vs Source Current (I_{OH})

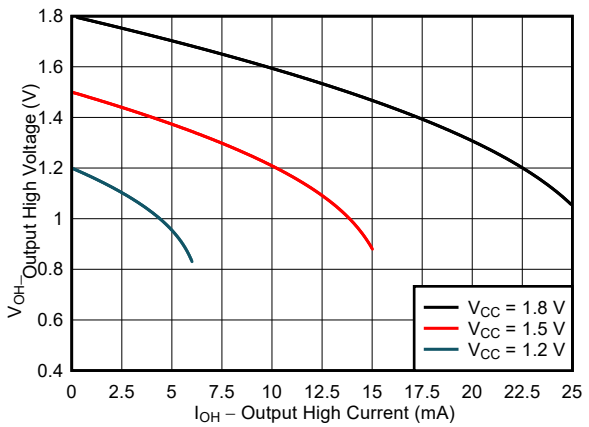

Figure 6-2. Typical (T_A=25°C) Output High Voltage (V_{OH}) vs Source Current (I_{OH})

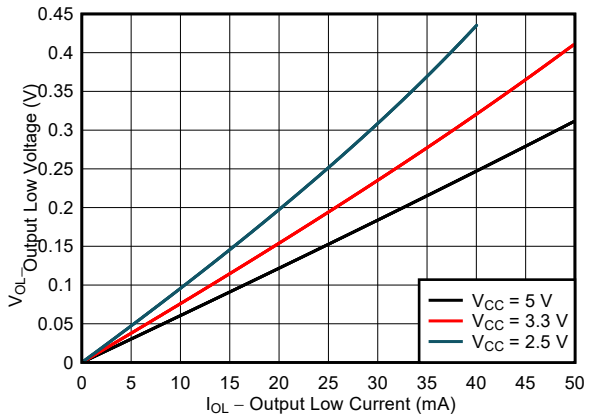

Figure 6-3. Typical (T_A=25°C) Output High Voltage (V_{OL}) vs Sink Current (I_{OL})

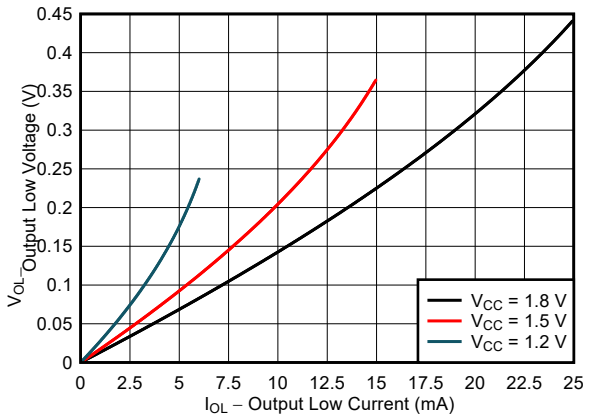

Figure 6-4. Typical (T_A=25°C) Output High Voltage (V_{OL}) vs Sink Current (I_{OL})

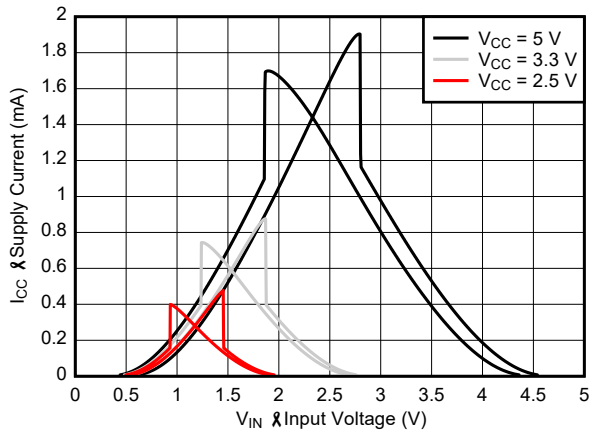

Figure 6-5. Typical (T_A=25°C) Supply Current (I_{CC}) vs Input Voltage (V_{IN})

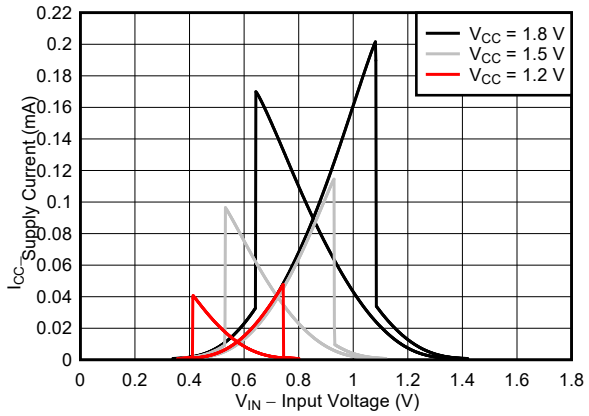

Figure 6-6. Typical (T_A=25°C) Supply Current (I_{CC}) vs Input Voltage (V_{IN})

7 Parameter Measurement Information

7.1 Load Circuit and Voltage Waveforms

Unless otherwise noted, all input pulses are supplied by generators having the following characteristics:

- f = 1 MHz
- Z_O = 50 Ω
- Δt/ΔV ≤ 1 ns/V

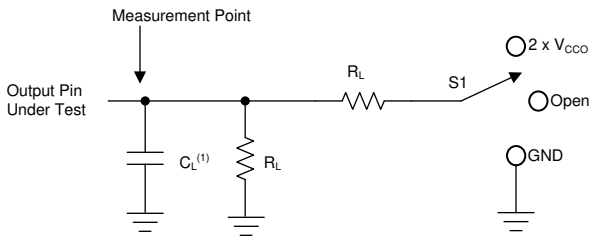

A. C_L includes probe and jig capacitance.

Figure 7-1. Load Circuit

Table 7-1. Load Circuit Conditions

Parameter		V_{CCO}	R_L	C_L	S_1	V_{TP}
t_{pd}	Propagation (delay) time	1.1 V – 5.5 V	2 kΩ	15 pF	Open	N/A
t_{en}, t_{dis}	Enable time, disable time	1.1 V – 1.6 V	2 kΩ	15 pF	2 × V_{CCO}	0.1 V
		1.65 V – 2.7 V	2 kΩ	15 pF	2 × V_{CCO}	0.15 V
		3.0 V – 5.5 V	2 kΩ	15 pF	2 × V_{CCO}	0.3 V
t_{en}, t_{dis}	Enable time, disable time	1.1 V – 1.6 V	2 kΩ	15 pF	GND	0.1 V
		1.65 V – 2.7 V	2 kΩ	15 pF	GND	0.15 V
		3.0 V – 5.5 V	2 kΩ	15 pF	GND	0.3 V

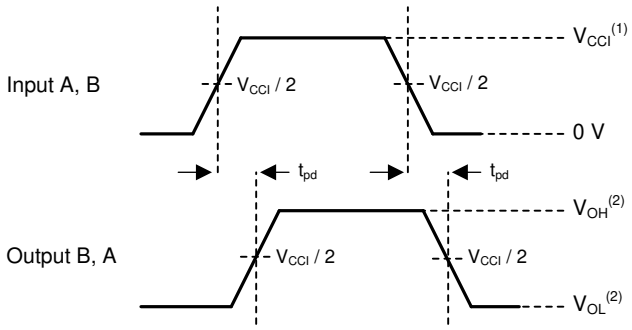

1. V_{CCI} is the supply pin associated with the input port.
2. V_{OH} and V_{OL} are typical output voltage levels that occur with specified R_L, C_L, and S_1.

Figure 7-2. Propagation Delay

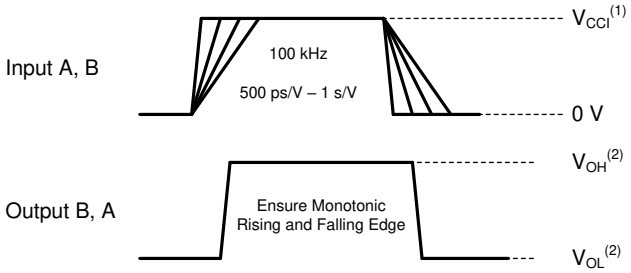

1. V_{CCI} is the supply pin associated with the input port.
2. V_{OH} and V_{OL} are typical output voltage levels that occur with specified R_L, C_L, and S_1.

Figure 7-3. Input Transition Rise and Fall Rate

Copyright © 2022 Texas Instruments Incorporated

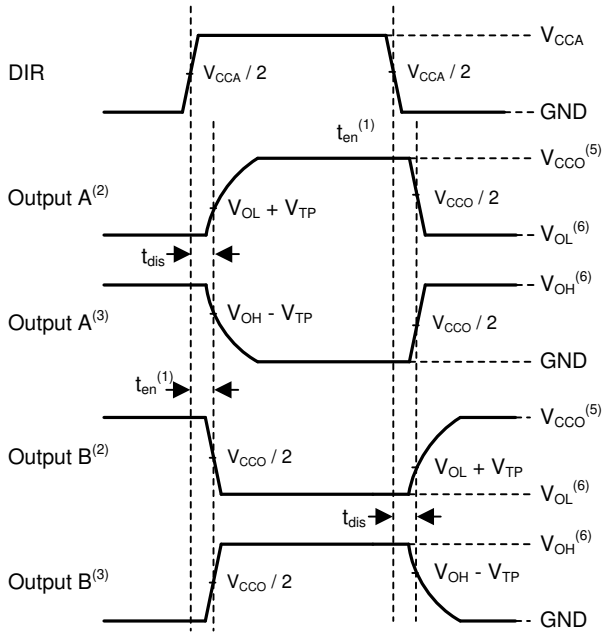

1. Illustrative purposes only. Enable time is a calculation as described in Enable Times..
2. Output waveform on the condition that input is driven to a valid Logic low.
3. Output waveform on the condition that input is driven to a valid Logic high.
4. V_{CCI} is the supply pin associated with the input port.
5. V_{CCO} is the supply pin associated with the output port.
6. V_{OH} and V_{OL} are typical output voltage levels with specified R_L, C_L, and S_1.

Figure 7-4. Enable Time And Disable Time

8 Detailed Description

8.1 Overview

The SN74LXC2T45 is a 2-bit translating transceiver that uses two individually configurable power-supply rails. The device is operational with both V_{CCA} and V_{CCB} supplies as low as 1.1 V and as high as 5.5 V. Additionally, the device can be operated with $V_{CCA} = V_{CCB}$. The A port is designed to track V_{CCA}, and the B port is designed to track V_{CCB}.

The SN74LXC2T45 device is designed for asynchronous communication between two data buses, and transmits data from the A bus to the B bus or from the B bus to the A bus based on the logic level of the direction-control input (DIR). The control pin of the SN74LXC2T45 (DIR) are referenced to V_{CCA}. The input circuitry on both A and B ports is always active and must have a logic HIGH or LOW level applied to prevent excess I_{CC} and I_{CCZ}.

This device is fully specified for partial-power-down applications using the I_{off} current. The I_{off} protection circuitry ensures that no excessive current is drawn from or sourced into an input, output, or I/O while the device is powered down.

The V_{CC} isolation or V_{CC} disconnect feature ensures that if either V_{CC} is less than 100 mV or disconnected with the complementary supply within the recommended operating conditions, both I/O ports are weakly pulled-down and then set to the high-impedance state by disabling their outputs while the supply current is maintained. The $I_{off\text{-}float}$ circuitry ensures that no excessive current is drawn from or sourced into an input, output, or I/O while the supply is floating.

Glitch-free power supply sequencing allows either supply rail to be powered on or off in any order while providing robust power sequencing performance.

8.2 Functional Block Diagram

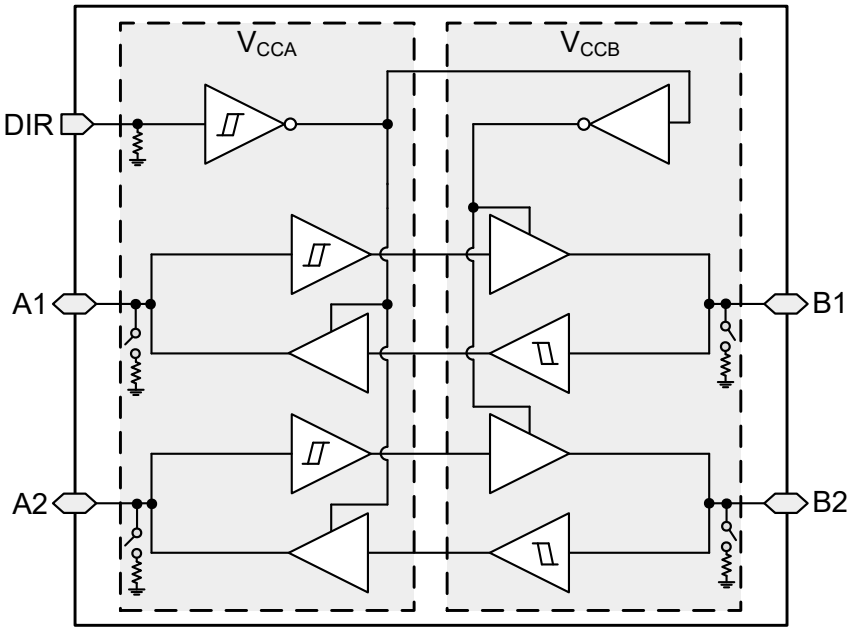

Copyright © 2022 Texas Instruments Incorporated

8.3 Feature Description

8.3.1 CMOS Schmitt-Trigger Inputs with Integrated Pulldowns

Standard CMOS inputs are high impedance and are typically modeled as a resistor in parallel with the input capacitance given in the *Electrical Characteristics*. The worst case resistance is calculated with the maximum input voltage, given in the *Absolute Maximum Ratings*, and the maximum input leakage current, given in the *Electrical Characteristics*, using ohm's law (R = V ÷ I).

The Schmitt-trigger input architecture provides hysteresis as defined by ΔV_T in the *Electrical Characteristics*, which makes this device extremely tolerant to slow or noisy inputs. Driving the inputs slowly will increase dynamic current consumption of the device. For additional information regarding Schmitt-trigger inputs, see Understanding Schmitt Triggers.

8.3.1.1 I/O's with Integrated Dynamic Pull-Down Resistors

Input circuits of the data I/O's are always active even when the device is disabled. It is recommended to keep a valid voltage level at the I/O's to avoid high current consumption. To help avoid floating inputs on the I/O's during disabling, this device has 100-kΩ typical integrated weak dynamic pull-downs on all data I/O's. When the device is disabled, the dynamic pull-downs are activated for only a short period of time to help drive and keep low any floating inputs before the device I/O's become high impedance. If the I/O lines are to be floated after the device is disabled, then it is recommended to keep them at a valid input voltage level using external pull-downs. This feature is ideal for loads of 30 pF or less. If greater capactive loading is present then external pull-downs are recommended. If an external pull-up is required, it should be no larger than 15 kΩ to avoid contention with the 100 kΩ internal pull-down.

8.3.1.2 Control Inputs with Integrated Static Pull-Down Resistors

Similar to the data I/O's, floating control inputs can cause high current consumption. To help avoid this concern, this device has integrated weak static pull-downs of 5 MΩ typical on the control input (DIR). These pull-downs are always present. For example, if the DIR pin is left floating, then the B port will be configured as an input and the A port configured as an output.

8.3.2 Balanced High-Drive CMOS Push-Pull Outputs

A balanced output allows the device to sink and source similar currents. The high drive capability of this device creates fast edges into light loads so routing and load conditions should be considered to prevent ringing. Additionally, the outputs of this device are capable of driving larger currents than the device can sustain without being damaged. The electrical and thermal limits defined in the *Absolute Maximum Ratings* must be followed at all times.

9 Partial Power Down (I_{off})

The inputs and outputs for this device enter a high-impedance state when the device is powered down, inhibiting current backflow into the device. The maximum leakage into or out of any input or output pin on the device is specified by I_{off} in the *Electrical Characteristics*.

10 V_{CC} Isolation and V_{CC} Disconnect ($I_{off\text{-}float}$)

This device has I/O's with Integrated Pull-Down Resistors. The I/O's will get pulled down and then enter a high-impedance state when either supply is < 100 mV or left floating (disconnected), while the other supply is still connected to the device. It is recommended that the I/O's for this device are not driven and kept at a logic low state prior to floating (disconnecting) either supply.

The maximum supply current is specified by I_{CCx}, while V_{CCx} is floating, in the *Electrical Characterstics*. The maximum leakage into or out of any input or output pin on the device is specified by $I_{off(float)}$ in the *Electrical Characteristics*.

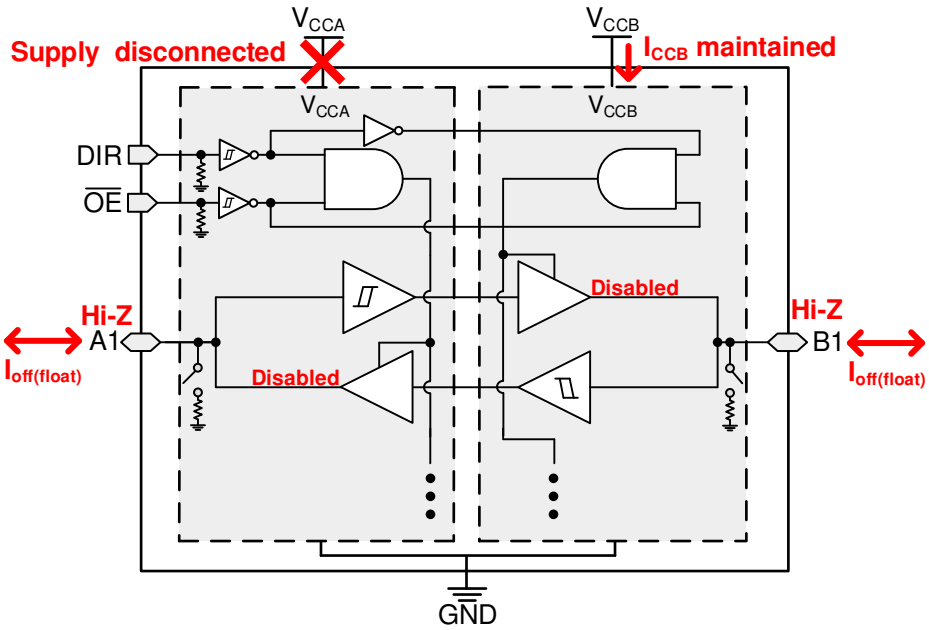

Figure 10-1. V_{CC} Disconnect Feature

11 Over-Voltage Tolerant Inputs

Input signals to this device can be driven above the supply voltage so long as they remain below the maximum input voltage value specified in the *Recommended Operating Conditions*.

12 Glitch-Free Power Supply Sequencing

Either supply rail may be powered on or off in any order without producing a glitch on the I/Os (that is, where the output erroneously transitions to VCC when it should be held low or vice versa). Glitches of this nature can be misinterpreted by a peripheral as a valid data bit, which could trigger a false device reset of the peripheral, a false device configuration of the peripheral, or even a false data initialization by the peripheral.

Copyright © 2022 Texas Instruments Incorporated

13 Negative Clamping Diodes

Figure 13-1 shows how the inputs and outputs to this device have negative clamping diodes.

CAUTION

Voltages beyond the values specified in the *Absolute Maximum Ratings* table can cause damage to the device. The input negative-voltage and output voltage ratings may be exceeded if the input and output clamp-current ratings are observed.

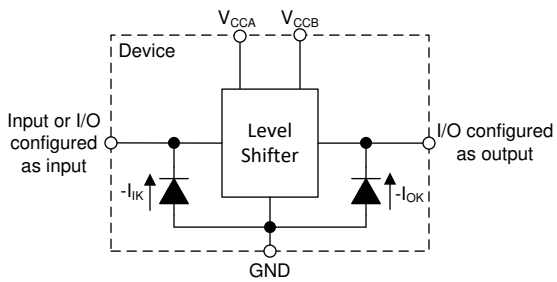

Figure 13-1. Electrical Placement of Clamping Diodes for Each Input and Output

14 Fully Configurable Dual-Rail Design

Both the V_{CCA} and V_{CCB} pins can be supplied at any voltage from 1.1 V to 5.5 V, making the device suitable for translating between any of the voltage nodes (1.2 V, 1.5 V, 1.8 V, 3.3 V, and 5.0 V).

15 Supports High-Speed Translation

The SN74LXC2T45 device can support high data-rate applications. The translated signal data rate can be up to 420 Mbps when the signal is translated from 3.3 V to 5.0 V.

16 Device Functional Modes

Table 16-1. Function Table

CONTROL INPUTS (1)	PORT STATUS		OPERATION
DIR	A PORT	B PORT	
L	Output (Enabled)	Input (Hi-Z)	B data to A bus
H	Input (Hi-Z)	Output (Enabled)	A data to B bus

(1) Input circuits of the data I/Os are always active and should be kept at a valid logic level.

17 Application and Implementation

Note

Information in the following applications sections is not part of the TI component specification, and TI does not warrant its accuracy or completeness. TI's customers are responsible for determining suitability of components for their purposes, as well as validating and testing their design implementation to confirm system functionality.

17.1 Application Information

The SN74LXC2T45 device can be used in level-translation applications for interfacing devices or systems operating at different interface voltages with one another. The SN74LXC2T45 device is ideal for use in applications where a push-pull driver is connected to the data I/Os. The maximum data rate can be up to 420 Mbps when device translates a signal from 3.3 V to 5.0 V.

17.2 Enable Times

Calculate the enable times for the SN74LXC2T45 using the following formulas:

$$t_{A_en}\ (\text{DIR to A}) = t_{dis}\ (\text{DIR to B}) + t_{pd}\ (\text{B to A}) \quad (1)$$

$$t_{B_en}\ (\text{DIR to B}) = t_{dis}\ (\text{DIR to A}) + t_{pd}\ (\text{A to B}) \quad (2)$$

In a bidirectional application, these enable times provide the maximum delay time from the time the DIR bit is switched until an output is expected. For example, if the SN74LXC2T45 initially is transmitting from A to B, then the DIR bit is switched; the B port of the device must be disabled (t_{dis}) before presenting it with an input. After the B port has been disabled, an input signal applied to it appears on the corresponding A port after the specified propagation delay (t_{pd}). To avoid bus contention, care should be taken to not apply an input signal prior to the output being disabled (t_{dis} maximum).

17.3 Typical Application

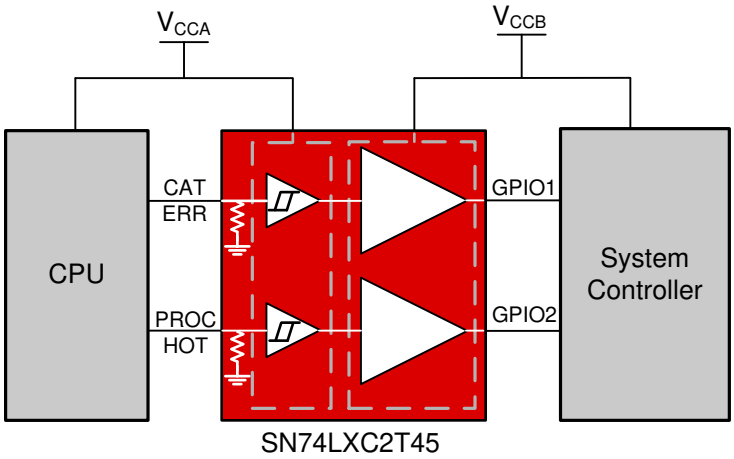

Figure 17-1. GPIO Driver Application

Copyright © 2022 Texas Instruments Incorporated

17.3.1 Design Requirements

For this design example, use the parameters listed in Table 17-1.

Table 17-1. Design Parameters

DESIGN PARAMETERS	EXAMPLE VALUES
Input voltage range	1.1 V to 5.5 V
Output voltage range	1.1 V to 5.5 V

17.3.2 Detailed Design Procedure

To begin the design process, determine the following:

- Input voltage range
  - Use the supply voltage of the device that is driving the SN74LXC2T45 device to determine the input voltage range. For a valid logic-high, the value must exceed the positive-going input-threshold voltage (V_{t+}) of the input port. For a valid logic low the value must be less than the negative-going input-threshold voltage (V_{t-}) of the input port.
- Output voltage range
  - Use the supply voltage of the device that the SN74LXC2T45 device is driving to determine the output voltage range.

18 Power Supply Recommendations

Always apply a ground reference to the GND pins first. This device is designed for glitch free power sequencing without any supply sequencing requirements such as ramp order or ramp rate.

This device was designed with various power supply sequencing methods in mind to help prevent unintended triggering of downstream devices, as described in Glitch-Free Power Supply Sequencing.

Copyright © 2022 Texas Instruments Incorporated

19 Layout

19.1 Layout Guidelines

To ensure reliability of the device, following common printed-circuit board layout guidelines are recommended:

- Use bypass capacitors on the power supply pins and place them as close to the device as possible. A 0.1 µF capacitor is recommended, but transient performance can be improved by having both 1 µF and 0.1 µF capacitors in parallel as bypass capacitors.
- The high drive capability of this device creates fast edges into light loads. So routing and load conditions should be considered to prevent ringing.

19.2 Layout Example

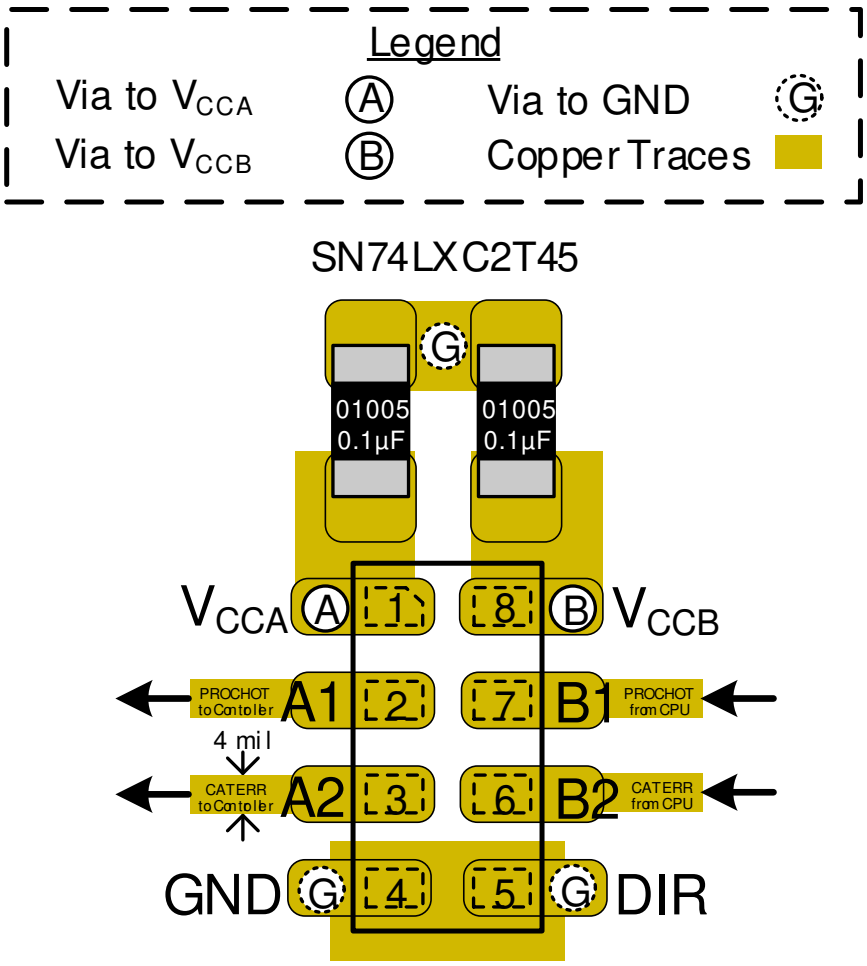

Figure 19-1. Layout Example—SN74LXC2T45DTT

Copyright © 2022 Texas Instruments Incorporated

20 Device and Documentation Support

20.1 Documentation Support

20.1.1 Related Documentation

For related documentation, see the following:

- Texas Instruments, *Understanding Schmitt Triggers* application report

20.2 Receiving Notification of Documentation Updates

To receive notification of documentation updates, navigate to the device product folder on ti.com. Click on *Subscribe to updates* to register and receive a weekly digest of any product information that has changed. For change details, review the revision history included in any revised document.

20.3 Support Resources

TI E2E™ support forums are an engineer's go-to source for fast, verified answers and design help — straight from the experts. Search existing answers or ask your own question to get the quick design help you need.

Linked content is provided "AS IS" by the respective contributors. They do not constitute TI specifications and do not necessarily reflect TI's views; see TI's Terms of Use.

20.4 Trademarks

TI E2E™ is a trademark of Texas Instruments.
All trademarks are the property of their respective owners.

20.5 Electrostatic Discharge Caution

This integrated circuit can be damaged by ESD. Texas Instruments recommends that all integrated circuits be handled with appropriate precautions. Failure to observe proper handling and installation procedures can cause damage.

ESD damage can range from subtle performance degradation to complete device failure. Precision integrated circuits may be more susceptible to damage because very small parametric changes could cause the device not to meet its published specifications.

20.6 Glossary

TI Glossary	This glossary lists and explains terms, acronyms, and definitions.

21 Mechanical, Packaging, and Orderable Information

The following pages include mechanical, packaging, and orderable information. This information is the most current data available for the designated devices. This data is subject to change without notice and revision of this document. For browser-based versions of this data sheet, refer to the left-hand navigation.

Copyright © 2022 Texas Instruments Incorporated

PACKAGING INFORMATION

Orderable part number	Status (1)	Material type (2)	Package | Pins	Package qty | Carrier	RoHS (3)	Lead finish/ Ball material (4)	MSL rating/ Peak reflow (5)	Op temp (°C)	Part marking (6)
SN74LXC2T45DCUR	Active	Production	VSSOP (DCU) | 8	3000 | LARGE T&R	Yes	SN	Level-1-260C-UNLIM	-40 to 125	
SN74LXC2T45DCUR.A	Active	Production	VSSOP (DCU) | 8	3000 | LARGE T&R	Yes	SN	Level-1-260C-UNLIM	-40 to 125	
SN74LXC2T45DTMR	Active	Production	X2SON (DTM) | 8	5000 | LARGE T&R	Yes	NIPDAUAG	Level-1-260C-UNLIM	-40 to 125	1LE
SN74LXC2T45DTMR.A	Active	Production	X2SON (DTM) | 8	5000 | LARGE T&R	Yes	NIPDAUAG	Level-1-260C-UNLIM	-40 to 125	1LE
SN74LXC2T45DTTR	Active	Production	X1SON (DTT) | 8	5000 | LARGE T&R	Yes	NIPDAUAG	Level-1-260C-UNLIM	-40 to 125	1LM
SN74LXC2T45DTTR.A	Active	Production	X1SON (DTT) | 8	5000 | LARGE T&R	Yes	NIPDAUAG	Level-1-260C-UNLIM	-40 to 125	1LM

(1) **Status:** For more details on status, see our product life cycle.

(2) **Material type:** When designated, preproduction parts are prototypes/experimental devices, and are not yet approved or released for full production. Testing and final process, including without limitation quality assurance, reliability performance testing, and/or process qualification, may not yet be complete, and this item is subject to further changes or possible discontinuation. If available for ordering, purchases will be subject to an additional waiver at checkout, and are intended for early internal evaluation purposes only. These items are sold without warranties of any kind.

(3) **RoHS values:** Yes, No, RoHS Exempt. See the TI RoHS Statement for additional information and value definition.

(4) **Lead finish/Ball material:** Parts may have multiple material finish options. Finish options are separated by a vertical ruled line. Lead finish/Ball material values may wrap to two lines if the finish value exceeds the maximum column width.

(5) **MSL rating/Peak reflow:** The moisture sensitivity level ratings and peak solder (reflow) temperatures. In the event that a part has multiple moisture sensitivity ratings, only the lowest level per JEDEC standards is shown. Refer to the shipping label for the actual reflow temperature that will be used to mount the part to the printed circuit board.

(6) **Part marking:** There may be an additional marking, which relates to the logo, the lot trace code information, or the environmental category of the part.

Multiple part markings will be inside parentheses. Only one part marking contained in parentheses and separated by a "~" will appear on a part. If a line is indented then it is a continuation of the previous line and the two combined represent the entire part marking for that device.

Important Information and Disclaimer: The information provided on this page represents TI's knowledge and belief as of the date that it is provided. TI bases its knowledge and belief on information provided by third parties, and makes no representation or warranty as to the accuracy of such information. Efforts are underway to better integrate information from third parties. TI has taken and continues to take reasonable steps to provide representative and accurate information but may not have conducted destructive testing or chemical analysis on incoming materials and chemicals. TI and TI suppliers consider certain information to be proprietary, and thus CAS numbers and other limited information may not be available for release.

In no event shall TI's liability arising out of such information exceed the total purchase price of the TI part(s) at issue in this document sold by TI to Customer on an annual basis.

OTHER QUALIFIED VERSIONS OF SN74LXC2T45 :

- Automotive : SN74LXC2T45-Q1

NOTE: Qualified Version Definitions:

- Automotive - Q100 devices qualified for high-reliability automotive applications targeting zero defects

TAPE AND REEL INFORMATION

REEL DIMENSIONS

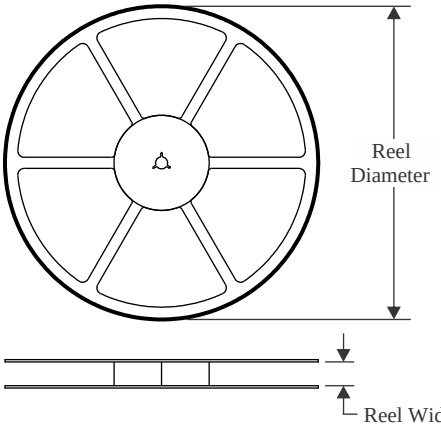

TAPE DIMENSIONS

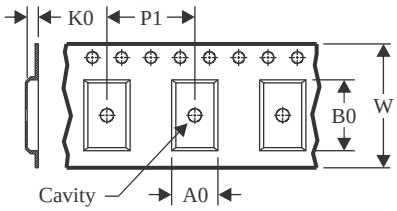

A0	Dimension designed to accommodate the component width
B0	Dimension designed to accommodate the component length
K0	Dimension designed to accommodate the component thickness
W	Overall width of the carrier tape
P1	Pitch between successive cavity centers

QUADRANT ASSIGNMENTS FOR PIN 1 ORIENTATION IN TAPE

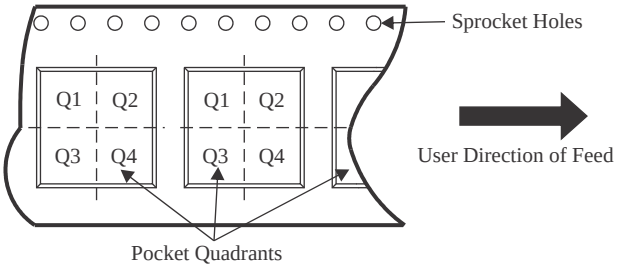

*All dimensions are nominal

Device	Package Type	Package Drawing	Pins	SPQ	Reel Diameter (mm)	Reel Width W1 (mm)	A0 (mm)	B0 (mm)	K0 (mm)	P1 (mm)	W (mm)	Pin1 Quadrant
SN74LXC2T45DCUR	VSSOP	DCU	8	3000	178.0	9.0	2.25	3.35	1.05	4.0	8.0	Q3
SN74LXC2T45DTMR	X2SON	DTM	8	5000	178.0	8.4	0.93	1.49	0.43	2.0	8.0	Q1
SN74LXC2T45DTTR	X1SON	DTT	8	5000	178.0	8.4	1.17	2.17	0.63	4.0	8.0	Q1

TAPE AND REEL BOX DIMENSIONS

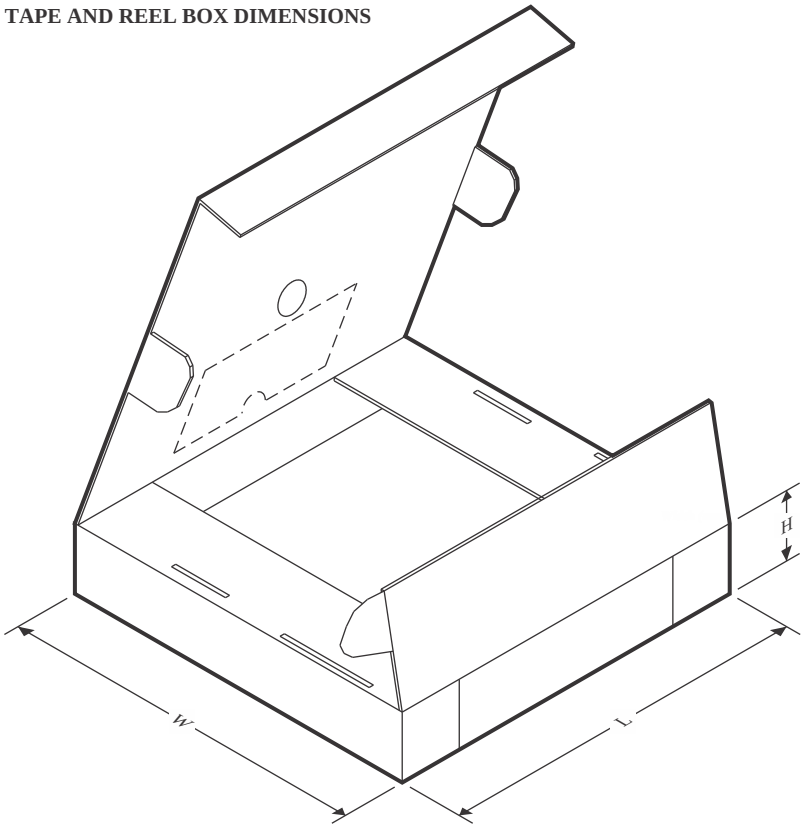

*All dimensions are nominal

Device	Package Type	Package Drawing	Pins	SPQ	Length (mm)	Width (mm)	Height (mm)
SN74LXC2T45DCUR	VSSOP	DCU	8	3000	180.0	180.0	18.0
SN74LXC2T45DTMR	X2SON	DTM	8	5000	205.0	200.0	33.0
SN74LXC2T45DTTR	X1SON	DTT	8	5000	205.0	200.0	33.0

DCU0008A

PACKAGE OUTLINE

VSSOP - 0.9 mm max height

SMALL OUTLINE PACKAGE

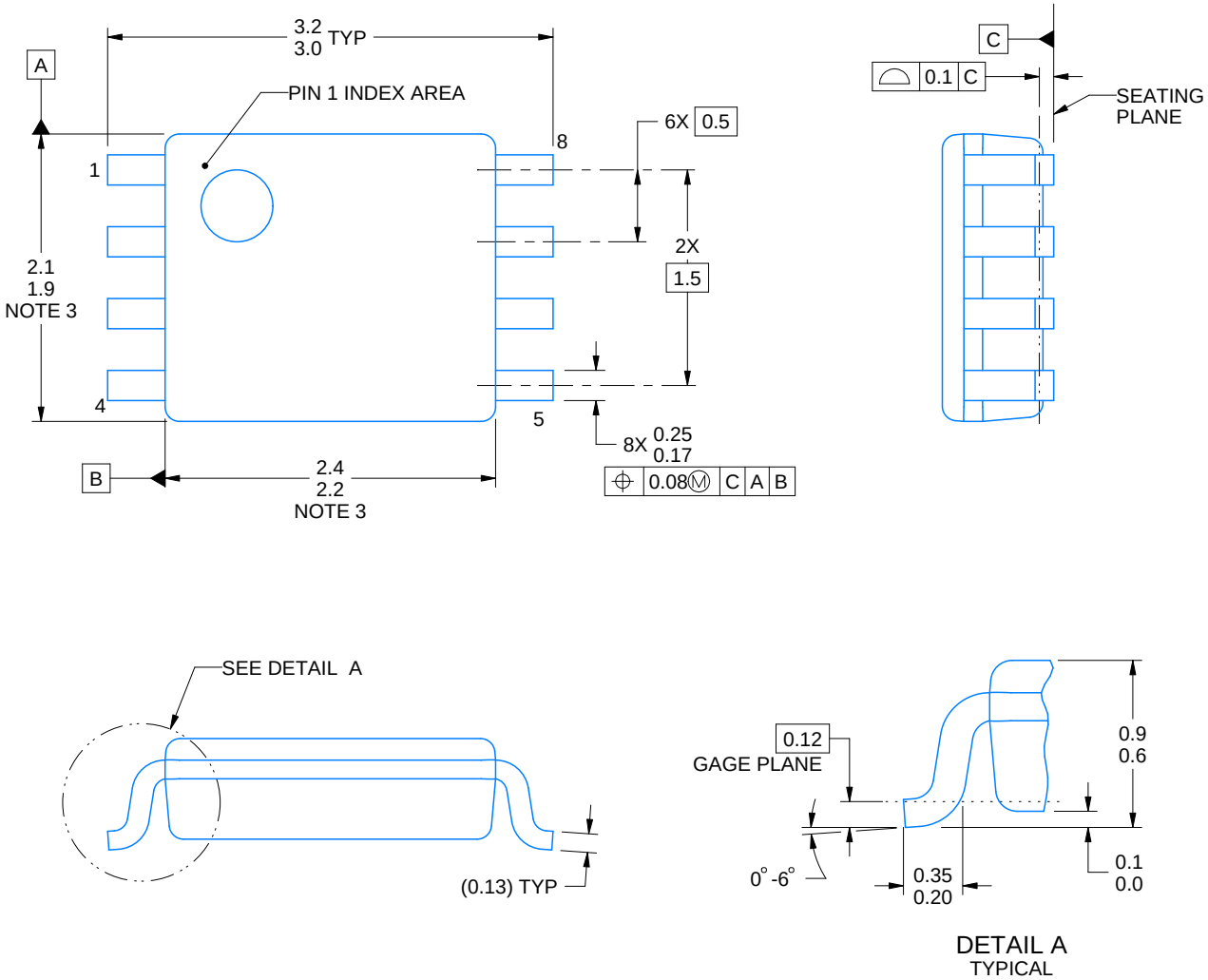

4225266/A 09/2014

NOTES:

1. All linear dimensions are in millimeters. Any dimensions in parenthesis are for reference only. Dimensioning and tolerancing per ASME Y14.5M.
2. This drawing is subject to change without notice.
3. This dimension does not include mold flash, protrusions, or gate burrs. Mold flash, protrusions, or gate burrs shall not exceed 0.15 mm per side.
4. Reference JEDEC registration MO-187 variation CA.

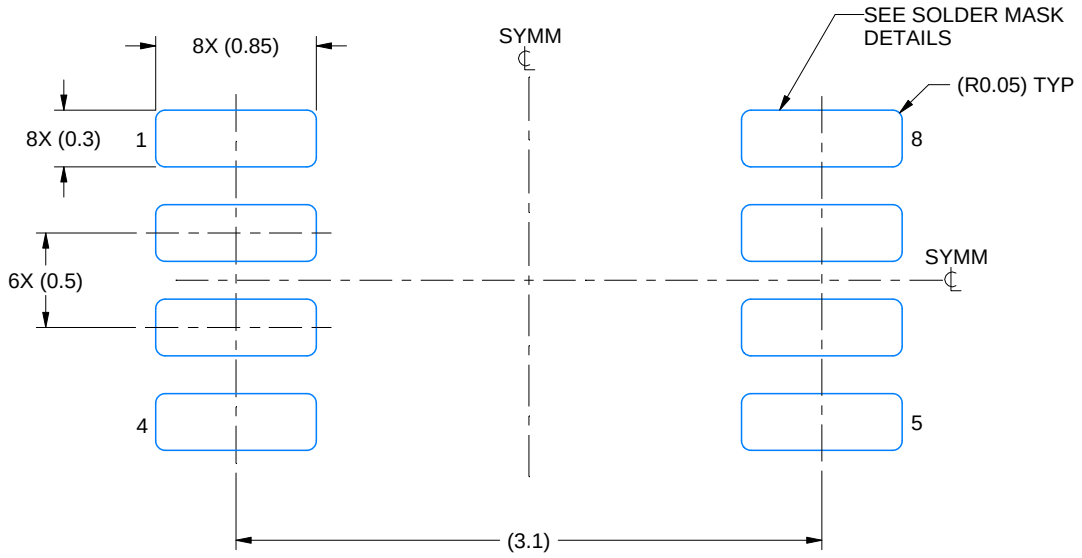

LAND PATTERN EXAMPLE
EXPOSED METAL SHOWN
SCALE: 25X

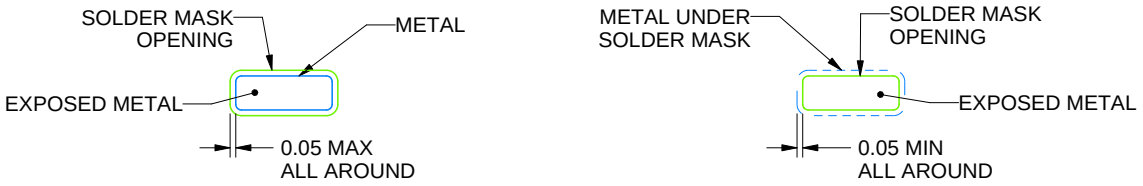

SOLDER MASK DETAILS

4225266/A 09/2014

NOTES: (continued)

5. Publication IPC-7351 may have alternate designs.
6. Solder mask tolerances between and around signal pads can vary based on board fabrication site.

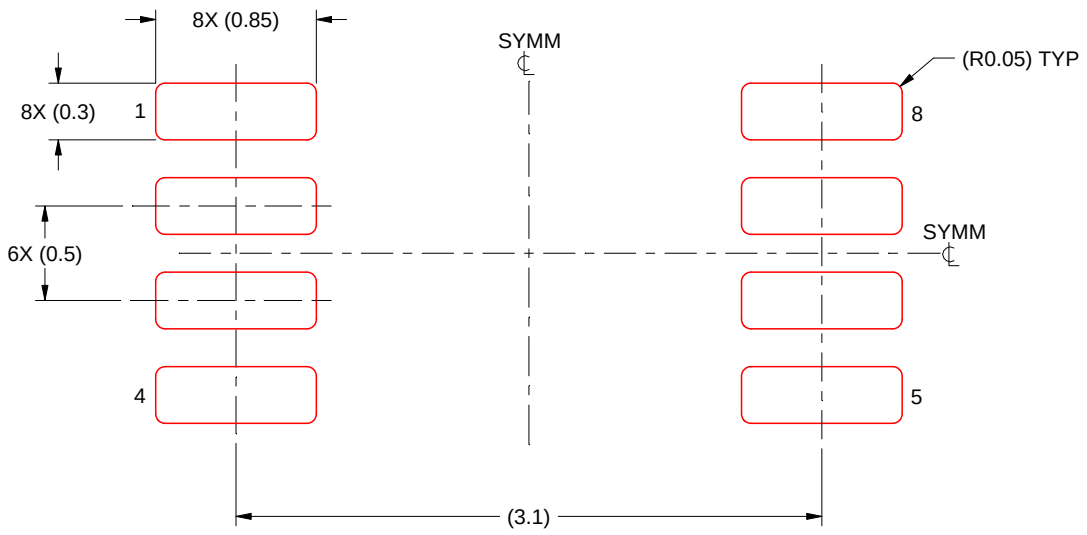

SOLDER PASTE EXAMPLE
BASED ON 0.125 mm THICK STENCIL
SCALE: 25X

4225266/A 09/2014

NOTES: (continued)

7. Laser cutting apertures with trapezoidal walls and rounded corners may offer better paste release. IPC-7525 may have alternate design recommendations.
8. Board assembly site may have different recommendations for stencil design.

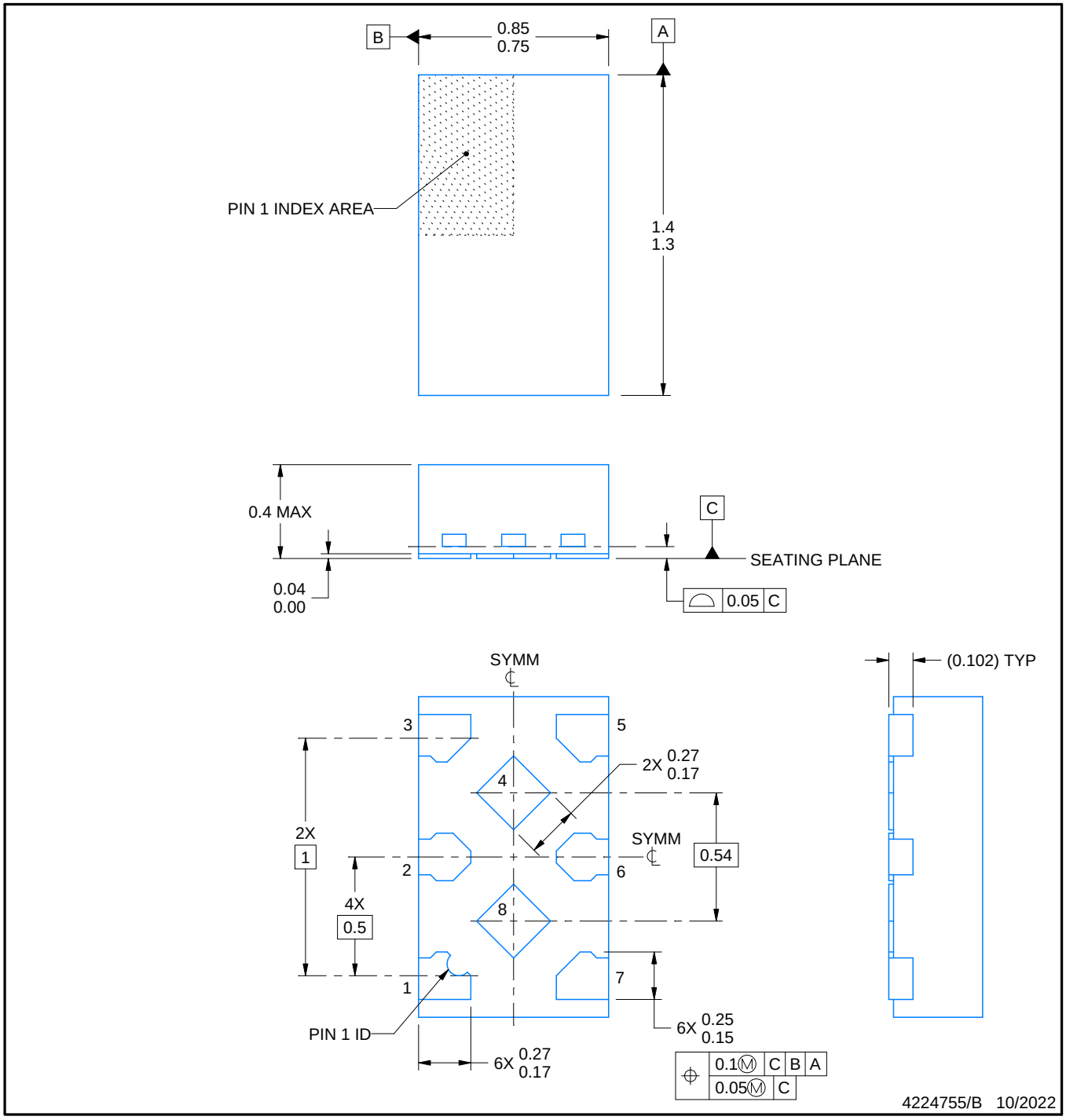

NOTES:

1. All linear dimensions are in millimeters. Any dimensions in parenthesis are for reference only. Dimensioning and tolerancing per ASME Y14.5M.
2. This drawing is subject to change without notice.
3. The package thermal pad(s) must be soldered to the printed circuit board for thermal and mechanical performance.

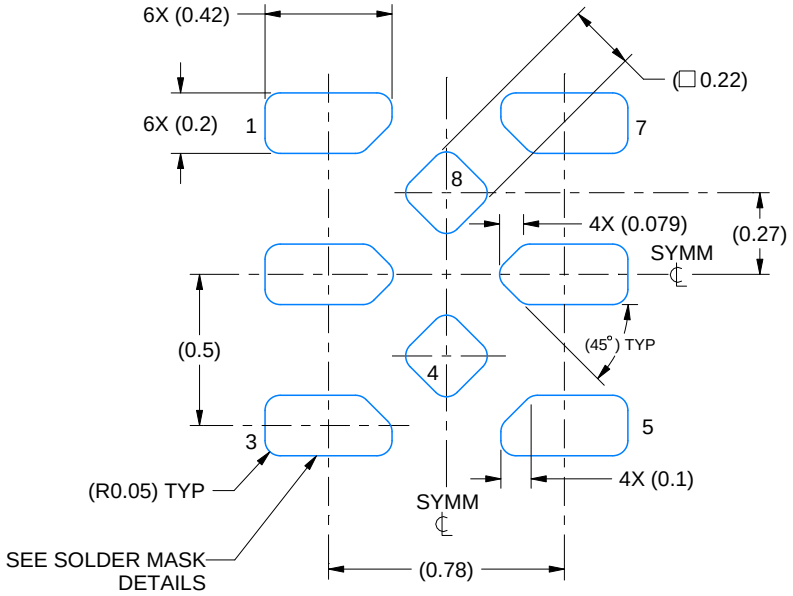

LAND PATTERN EXAMPLE
EXPOSED METAL SHOWN
SCALE:40X

SOLDER MASK DETAILS

4224755/B 10/2022

NOTES: (continued)

4. This package is designed to be soldered to a thermal pad on the board. For more information, see Texas Instruments literature number SLUA271 (www.ti.com/lit/slua271).

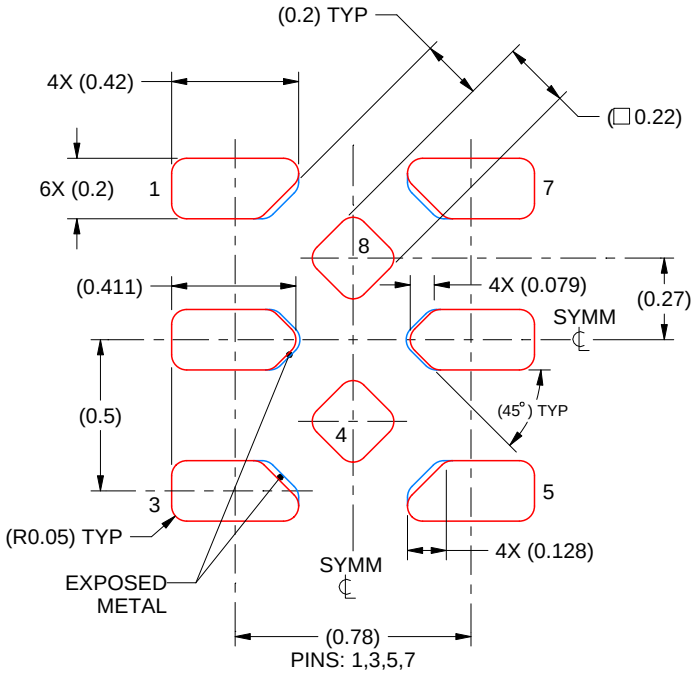

SOLDER PASTE EXAMPLE
BASED ON 0.075 mm THICK STENCIL
SCALE: 40X

4224755/B 10/2022

5. Laser cutting apertures with trapezoidal walls and rounded corners may offer better paste release. IPC-7525 may have alternate design recommendations.

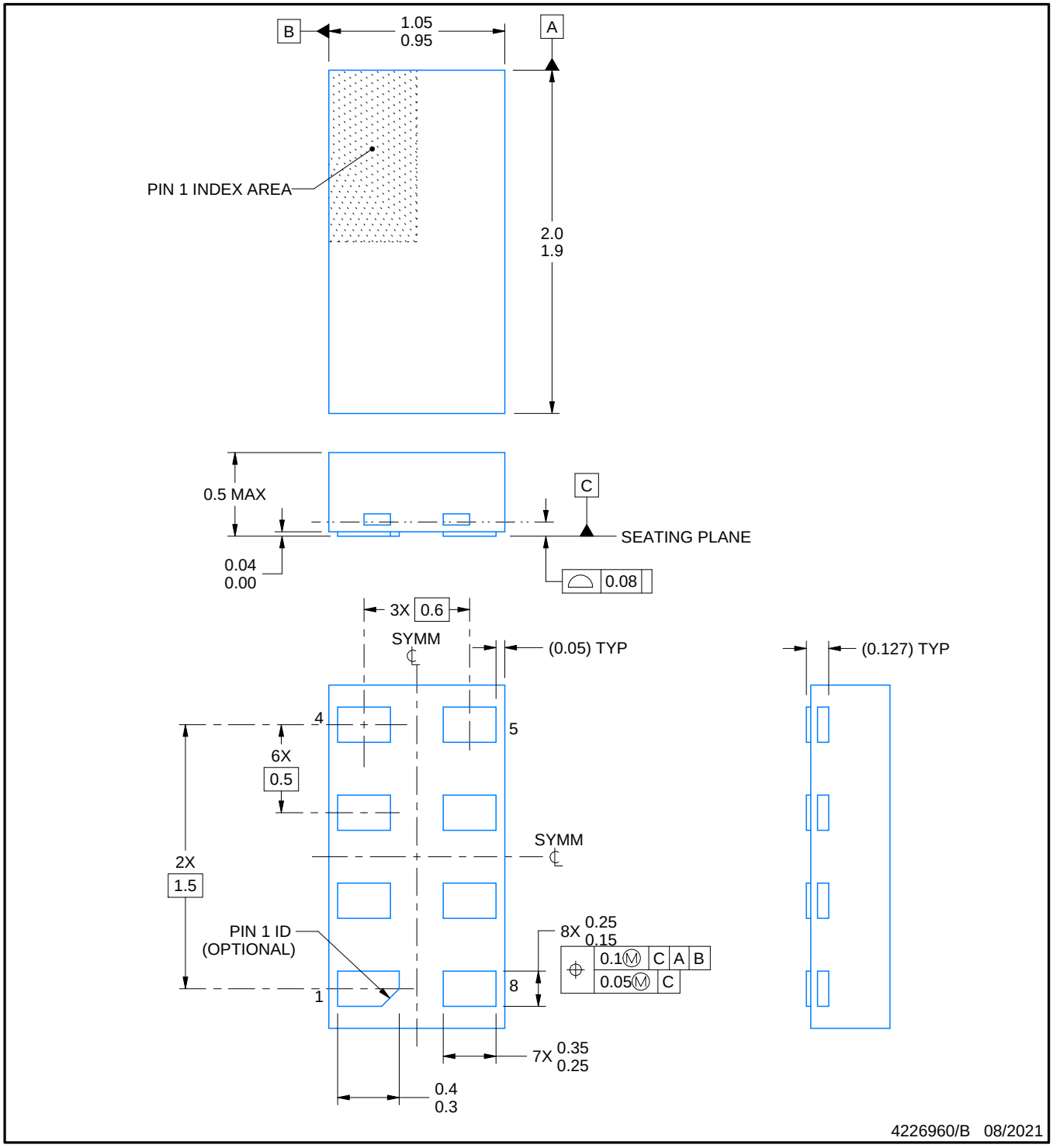

NOTES:

1. All linear dimensions are in millimeters. Any dimensions in parenthesis are for reference only. Dimensioning and tolerancing per ASME Y14.5M.
2. This drawing is subject to change without notice.

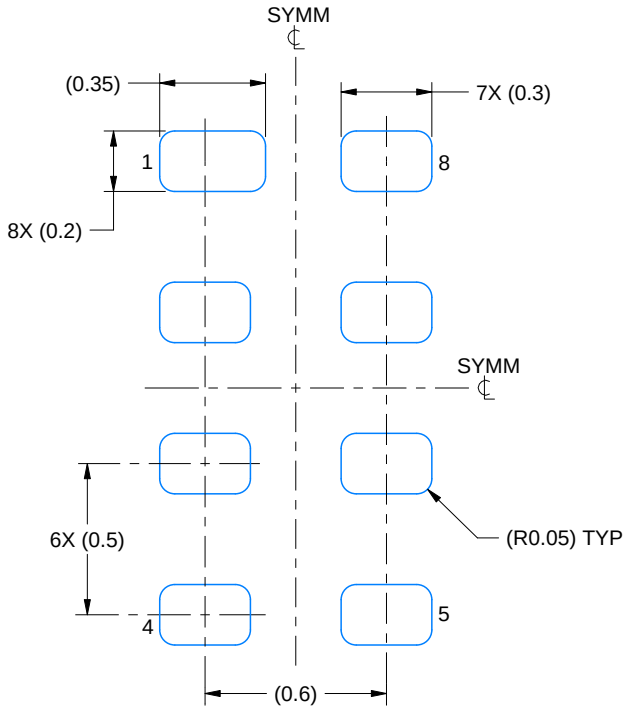

LAND PATTERN EXAMPLE
1:1 RATIO WITH PKG SOLDER PADS
EXPOSED METAL SHOWN
SCALE:40X

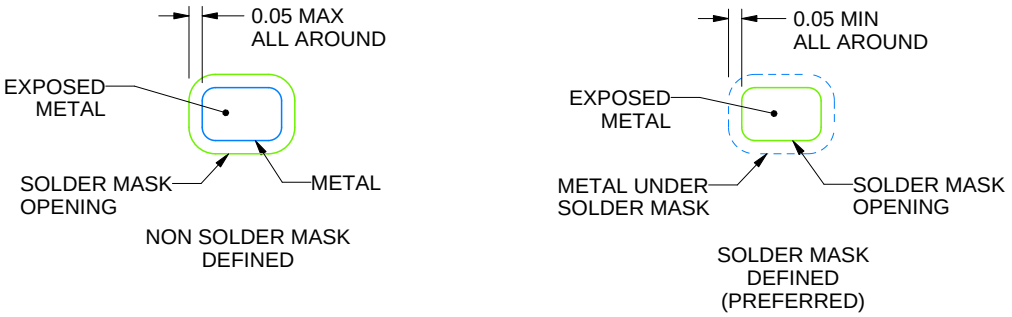

SOLDER MASK DETAILS

4226960/B 08/2021

NOTES: (continued)

3. For more information, see QFN/SON PCB application report in literature No. SLUA271 (www.ti.com/lit/slua271).

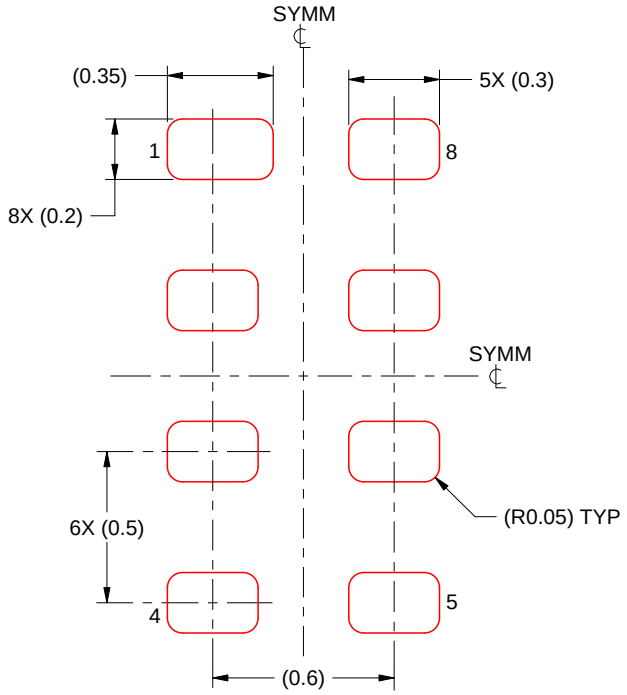

SOLDER PASTE EXAMPLE
BASED ON 0.075 - 0.1 mm THICK STENCIL
SCALE:40X

4226960/B 08/2021

NOTES: (continued)

4. Laser cutting apertures with trapezoidal walls and rounded corners may offer better paste release. IPC-7525 may have alternate design recommendations.

IMPORTANT NOTICE AND DISCLAIMER

TI PROVIDES TECHNICAL AND RELIABILITY DATA (INCLUDING DATASHEETS), DESIGN RESOURCES (INCLUDING REFERENCE DESIGNS), APPLICATION OR OTHER DESIGN ADVICE, WEB TOOLS, SAFETY INFORMATION, AND OTHER RESOURCES “AS IS” AND WITH ALL FAULTS, AND DISCLAIMS ALL WARRANTIES, EXPRESS AND IMPLIED, INCLUDING WITHOUT LIMITATION ANY IMPLIED WARRANTIES OF MERCHANTABILITY, FITNESS FOR A PARTICULAR PURPOSE OR NON-INFRINGEMENT OF THIRD PARTY INTELLECTUAL PROPERTY RIGHTS.

These resources are intended for skilled developers designing with TI products. You are solely responsible for (1) selecting the appropriate TI products for your application, (2) designing, validating and testing your application, and (3) ensuring your application meets applicable standards, and any other safety, security, regulatory or other requirements.

These resources are subject to change without notice. TI grants you permission to use these resources only for development of an application that uses the TI products described in the resource. Other reproduction and display of these resources is prohibited. No license is granted to any other TI intellectual property right or to any third party intellectual property right. TI disclaims responsibility for, and you fully indemnify TI and its representatives against any claims, damages, costs, losses, and liabilities arising out of your use of these resources.

TI’s products are provided subject to TI’s Terms of Sale, TI’s General Quality Guidelines, or other applicable terms available either on ti.com or provided in conjunction with such TI products. TI’s provision of these resources does not expand or otherwise alter TI’s applicable warranties or warranty disclaimers for TI products. Unless TI explicitly designates a product as custom or customer-specified, TI products are standard, catalog, general purpose devices.

TI objects to and rejects any additional or different terms you may propose.

Copyright © 2025, Texas Instruments Incorporated

Last updated 10/2025