Gate Drivers, High-Speed, Low-Side, Dual 4-A

FAN3223/FAN3224/FAN3225

WDFN8 3x3, 0.65P
CASE 511CD

SOIC8
CASE 751EB

Description

The FAN3223−25 family of dual 4 A gate drivers is designed to drive N−channel enhancement−mode MOSFETs in low-side switching applications by providing high peak current pulses during the short switching intervals. The driver is available with either TTL or CMOS input thresholds. Internal circuitry provides an under−voltage lockout function by holding the output LOW until the supply voltage is within the operating range. In addition, the drivers feature matched internal propagation delays between A and B channels for applications requiring dual gate drives with critical timing, such as synchronous rectifiers. This also enables connecting two drivers in parallel to effectively double the current capability driving a single MOSFET.

The FAN322X drivers incorporate MillerDrive™ architecture for the final output stage. This bipolar−MOSFET combination provides high current during the Miller plateau stage of the MOSFET turn−on / turn−off process to minimize switching loss, while providing rail−to−rail voltage swing and reverse current capability.

The FAN3223 offers two inverting drivers and the FAN3224 offers two non−inverting drivers. Each device has dual independent enable pins that default to ON if not connected. In the FAN3225, each channel has dual inputs of opposite polarity, which allows configuration as non−inverting or inverting with an optional enable function using the second input. If one or both inputs are left unconnected, internal resistors bias the inputs such that the output is pulled LOW to hold the power MOSFET OFF.

Features

- Industry−Standard Pinouts
- 4.5 V to 18 V Operating Range
- 5 A Peak Sink/Source at V_{DD} = 12 V
- 4.3 A Sink / 2.8 A Source at V_{OUT} = 6 V
- Choice of TTL or CMOS Input Thresholds
- Three Versions of Dual Independent Drivers:
  - Dual Inverting + Enable (FAN3223)
  - Dual Non−Inverting + Enable (FAN3224)
  - Dual−Inputs (FAN3225)
- Internal Resistors Turn Driver Off If No Inputs
- MillerDrive Technology
- 12 ns / 9 ns Typical Rise/Fall Times (2.2 nF Load)
- Under 20 ns Typical Propagation Delay Matched within 1 ns to the Other Channel
- Double Current Capability by Paralleling Channels
- 8−Lead 3x3 mm MLP, 8−Lead SOIC Package
- Rated from –40°C to +125°C Ambient
- These are Pb−Free Devices

MARKING DIAGRAMS

WDFN8

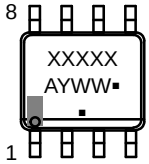

SOIC8

A	= Assembly Lot Code
L	= Wafer Lot
Y	= Year
W	= Work Week
▪	= Pb−Free Package

(Note: Microdot may be in either location)

*This information is generic. Please refer to device data sheet for actual part marking. Pb−Free indicator, “G” or microdot “ ▪”, may or may not be present.

ORDERING INFORMATION

See detailed ordering and shipping information on page 20 of this data sheet.

NOTE: Some of the devices on this data sheet have been **DISCONTINUED**. Please refer to the table on page 20.

Applications

- Switch−Mode Power Supplies
- High-Efficiency MOSFET Switching
- Synchronous Rectifier Circuits
- DC-to-DC Converters
- Motor Control

Related Resources

- AN−6069 — Application Review and Comparative Evaluation of Low−Side Gate Drivers

© Semiconductor Components Industries, LLC, 2019

PACKAGE OUTLINES

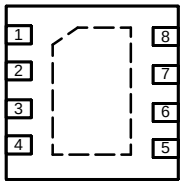

Figure 1. 3x3 mm MLP−8 (Top View)

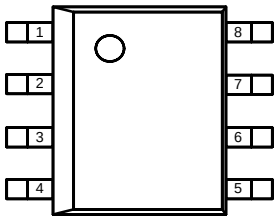

Figure 2. SOIC−8 (Top View)

THERMAL CHARACTERISTICS (Note 1)

Package	Θ_L (Note 2)	Θ_{JT} (Note 3)	Θ_{JA} (Note 4)	Ψ_{JB} (Note 5)	Ψ_{JT} (Note 6)	Unit
8−Lead 3x3 mm Molded Leadless Package (MLP)	1.2	64	42	2.8	0.7	°C/W
8−Pin Small Outline Integrated Circuit (SOIC)	38	29	87	41	2.3	°C/W

1. Estimates derived from thermal simulation; actual values depend on the application.
2. Theta_JL (Θ_{JL}): Thermal resistance between the semiconductor junction and the bottom surface of all the leads (including any thermal pad) that are typically soldered to a PCB.
3. Theta_JT (Θ_{JT}): Thermal resistance between the semiconductor junction and the top surface of the package, assuming it is held at a uniform temperature by a top−side heatsink.
4. Theta_JA (Θ_{JA}): Thermal resistance between junction and ambient, dependent on the PCB design, heat sinking, and airflow. The value given is for natural convection with no heatsink using a 2S2P board, as specified in JEDEC standards JESD51−2, JESD51−5, and JESD51−7, as appropriate.
5. Psi_JB (Ψ_{JB}): Thermal characterization parameter providing correlation between semiconductor junction temperature and an application circuit board reference point for the thermal environment defined in Note 4. For the MLP−8 package, the board reference is defined as the PCB copper connected to the thermal pad and protruding from either end of the package. For the SOIC−8 package, the board reference is defined as the PCB copper adjacent to pin 6.
6. Psi_JT (Ψ_{JT}): Thermal characterization parameter providing correlation between the semiconductor junction temperature and the center of the top of the package for the thermal environment defined in Note 4.

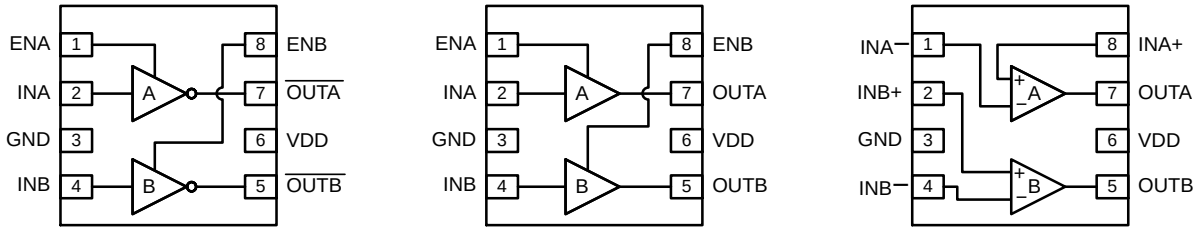

Figure 3. Pin Assignment

PIN DEFINITIONS

Name	Pin Description
ENA	Enable Input for Channel A. Pull pin LOW to inhibit driver A. ENA has TTL thresholds for both TTL and CMOS INx threshold
ENB	Enable Input for Channel B. Pull pin LOW to inhibit driver B. ENB has TTL thresholds for both TTL and CMOS INx threshold
GND	Ground. Common ground reference for input and output circuits
INA	Input to Channel A
INA+	Non−Inverting Input to Channel A. Connect to VDD to enable output
INA−	Inverting Input to Channel A. Connect to GND to enable output
INB	Input to Channel B
INB+	Non−Inverting Input to Channel B. Connect to VDD to enable output
INB−	Inverting Input to Channel B. Connect to GND to enable output
OUTA	Gate Drive Output A: Held LOW unless required input(s) are present and V_{DD} is above UVLO threshold
OUTB	Gate Drive Output B: Held LOW unless required input(s) are present and V_{DD} is above UVLO threshold
$\overline{\text{OUTA}}$	Gate Drive Output A (inverted from the input): Held LOW unless required input is present and V_{DD} is above UVLO threshold
$\overline{\text{OUTB}}$	Gate Drive Output B (inverted from the input): Held LOW unless required input is present and V_{DD} is above UVLO threshold
P1	Thermal Pad (MLP only). Exposed metal on the bottom of the package; may be left floating or connected to GND; NOT suitable for carrying current
VDD	Supply Voltage. Provides power to the IC

OUTPUT LOGIC

FAN3223 (x = A or B)				FAN3224 (x = A or B)				FAN3225 (x = A or B)		
ENx	**INx**	**OUTx**		**ENx**	**INx**	**OUTx**		**INx+**	**INx−**	**OUTx**
0	0	0		0	0 (Note 7)	0		0 (Note 7)	0	0
0	1 (Note 7)	0		0	1	0		0 (Note 7)	1 (Note 7)	0
1 (Note 7)	0	1		1 (Note 7)	0 (Note 7)	0		1	0	1
1 (Note 7)	1 (Note 7)	0		1 (Note 7)	1	1		1	1 (Note 7)	0

7. Default input signal if no external connection is made.

BLOCK DIAGRAMS

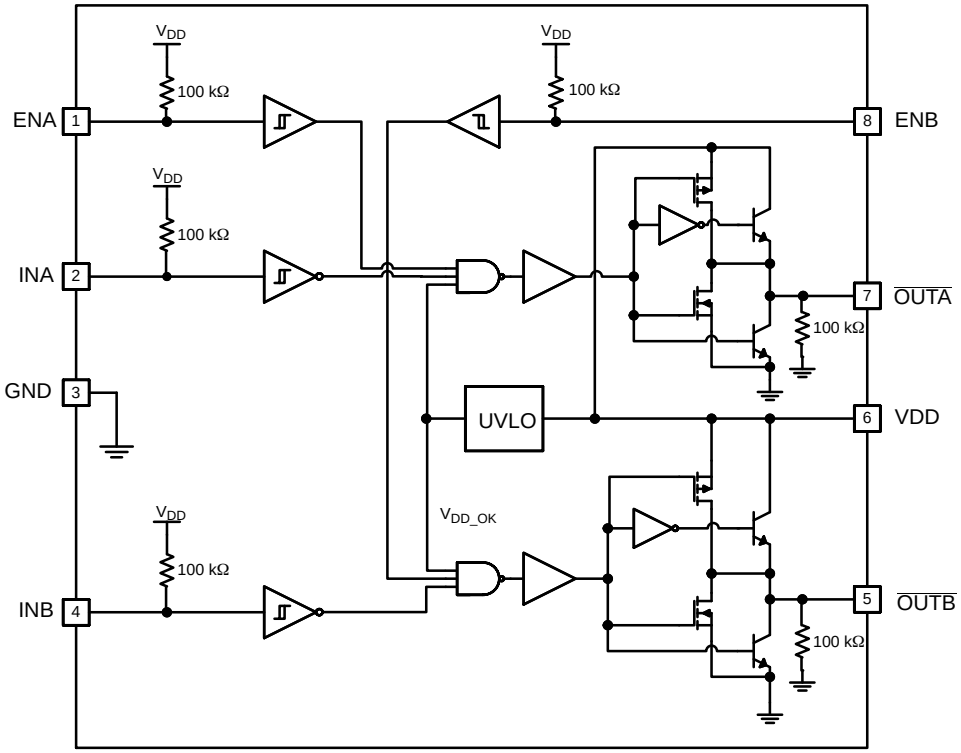

Figure 4. FAN3223 Block Diagram

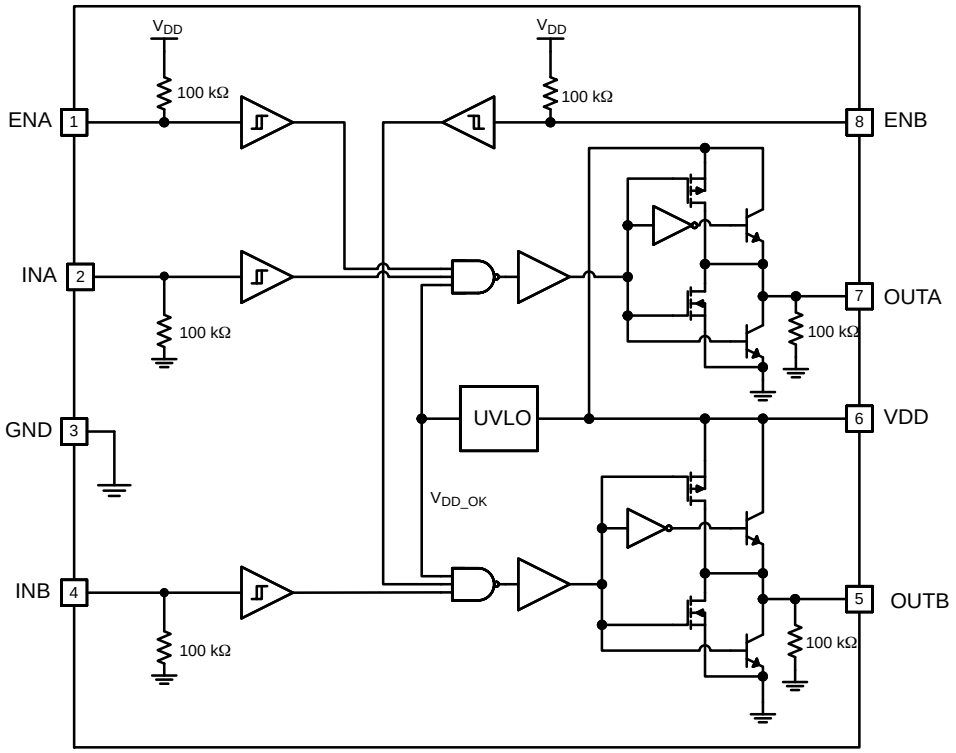

Figure 5. FAN3224 Block Diagram

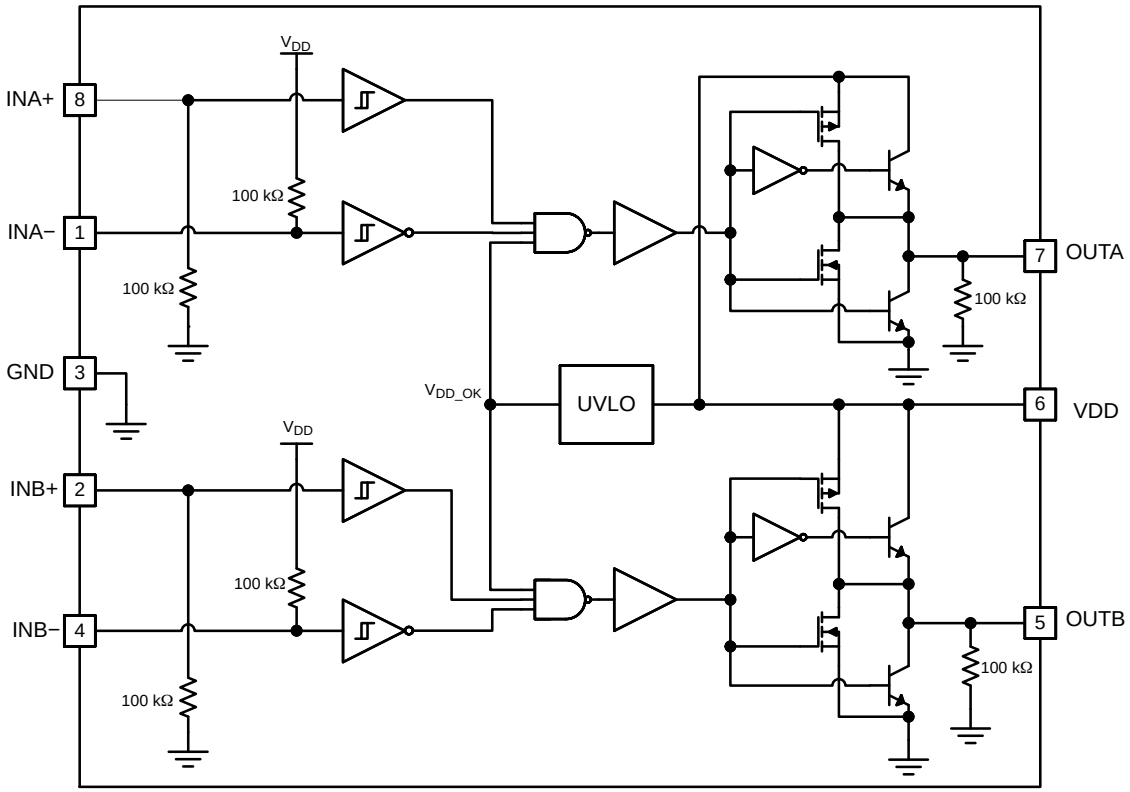

Figure 6. FAN3225 Block Diagram

ABSOLUTE MAXIMUM RATINGS

Symbol	Parameter		Min.	Max.	Unit
V_{DD}	VDD to PGND		−0.3	20.0	V
V_{EN}	ENA and ENB to GND		GND − 0.3	V_{DD} + 0.3	V
V_{IN}	INA, INA+, INA–, INB, INB+ and INB– to GND		GND − 0.3	V_{DD} + 0.3	V
V_{OUT}	OUTA and OUTB to GND	DC	GND − 0.3	V_{DD} + 0.3	V
T_L	Lead Soldering Temperature (10 Seconds)			+260	°C
T_J	Junction Temperature		−55	+150	°C
T_{STG}	Storage Temperature		−65	+150	°C

Stresses exceeding those listed in the Maximum Ratings table may damage the device. If any of these limits are exceeded, device functionality should not be assumed, damage may occur and reliability may be affected.

RECOMMENDED OPERATING CONDITIONS

Symbol	Parameter		Min.	Max.	Unit
V_{DD}	Supply Voltage Range		4.5	18.0	V
V_{EN}	Enable Voltage ENA and ENB		0	V_{DD}	V
V_{IN}	Input Voltage INA, INA+, INA–, INB, INB+ and INB–		0	V_{DD}	V
V_{OUT}	OUTA and OUTB to GND	Repetitive Pulse < 200 ns	−2.0	V_{DD} + 0.3	V
T_A	Operating Ambient Temperature		−40	+125	°C

Functional operation above the stresses listed in the Recommended Operating Ranges is not implied. Extended exposure to stresses beyond the Recommended Operating Ranges limits may affect device reliability.

ELECTRICAL CHARACTERISTICS

(Unless otherwise noted, V_{DD} = 12 V, T_J = −40°C to +125°C. Currents are defined as positive into the device and negative out of the device.)

Symbol	Parameter	Characteristic	Min	Typ	Max	Unit
SUPPLY						
V_{DD}	Operating Range		4.5		18.0	V
I_{DD}	Supply Current, Inputs / EN Not Connected	All except FAN3225C		0.70	0.95	mA
		FAN3225C (Note 8)		0.21	0.35	mA
V_{ON}	Turn−On Voltage	INA = ENA = V_{DD}, INB = ENB = 0 V	3.5	3.9	4.3	V
V_{OFF}	Turn−Off Voltage	INA = ENA = V_{DD}, INB = ENB = 0 V	3.3	3.7	4.1	V
INPUTS (FAN322XT) (Note 9)						
V_{INL_T}	INx Logic LOW Threshold		0.8	1.2		V
V_{INH_T}	INx Logic HIGH Threshold			1.6	2.0	V
V_{HYS_T}	TTL Logic Hysteresis Voltage		0.2	0.4	0.8	V
I_{IN+}	Non−Inverting Input Current	IN from 0 to V_{DD}	−1		175	μA
I_{IN-}	Inverting Input Current	IN from 0 to V_{DD}	−175		1	μA
INPUTS (FAN322XC) (Note 9)						
V_{INL_C}	INx Logic Low Threshold		30	38		%V_{DD}
V_{INH_C}	INx Logic High Threshold			55	70	%V_{DD}
V_{HYS_C}	CMOS Logic Hysteresis Voltage			17		%V_{DD}
I_{IN+}	Non−Inverting Input Current	IN from 0 to V_{DD}	−1		175	μA
I_{IN-}	Inverting Input Current	IN from 0 to V_{DD}	−175		1	μA
ENABLE (FAN3223C, FAN3223T, FAN3224C, FAN3224T)						
V_{ENL}	Enable Logic Low Threshold	EN from 5 V to 0 V	0.8	1.2		V
V_{ENH}	Enable Logic High Threshold	EN from 0 V to 5 V		1.6	2.0	V
V_{HYS_T}	TTL Logic Hysteresis Voltage (Note 10)			0.4		V
R_{PU}	Enable Pull−Up Resistance (Note 10)			100		kΩ
t_{D3}	EN to Output Propagation Delay (Note 11)	0 V to 5 V EN, 1 V/ns Slew Rate	9	17	26	ns
t_{D4}		5 V to 0 V EN, 1 V/ns Slew Rate	11	18	28	ns
OUTPUTS						
I_{SINK}	OUT Current, Mid−Voltage, Sinking (Note 10)	OUT at V_{DD}/2, C_{LOAD} = 0.22 μF, f = 1 kHz		4.3		A
I_{SOURCE}	OUT Current, Mid−Voltage, Sourcing (Note 10)	OUT at V_{DD}/2, C_{LOAD}=0.22 μF, f = 1 kHz		−2.8		A
I_{PK_SINK}	OUT Current, Peak, Sinking (Note 10)	C_{LOAD} = 0.22 μF, f = 1 kHz		5		A
I_{PK_SOURCE}	OUT Current, Peak, Sourcing (Note 10)	C_{LOAD} = 0.22 μF, f = 1 kHz		−5		A
t_{RISE}	Output Rise Time (Note 12)	C_{LOAD} = 2200 pF		12	20	ns
t_{FALL}	Output Fall Time (Note 12)	C_{LOAD} = 2200 pF		9	17	ns
$t_{DEL.MATCH}$	Propagation Matching Between Channels	INA = INB, OUTA and OUTB at 50% Point		2	4	ns
I_{RVS}	Output Reverse Current Withstand (Note 10)			500		mA

ELECTRICAL CHARACTERISTICS
(Unless otherwise noted, V_{DD} = 12 V, T_J = −40°C to +125°C. Currents are defined as positive into the device and negative out of the device.)

Symbol	Parameter	Characteristic	Min	Typ	Max	Unit
OUTPUTS						
t_{D1}, t_{D2}	Output Propagation Delay, CMOS Inputs (Note 12)	0 – 12 V_{IN}, 1 V/ns Slew Rate	10	18	29	ns
t_{D1}, t_{D2}	Output Propagation Delay, TTL Inputs (Note 12)	0 – 5 V_{IN}, 1 V/ns Slew Rate	9	17	29	ns

8. Lower supply current due to inactive TTL circuitry.
9. EN inputs have TTL thresholds; refer to the ENABLE section.
10. Not tested in production.
11. See Timing Diagrams of Figure 9 and Figure 10.
12. See Timing Diagrams of Figure 7 and Figure 8.

TIMING DIAGRAMS

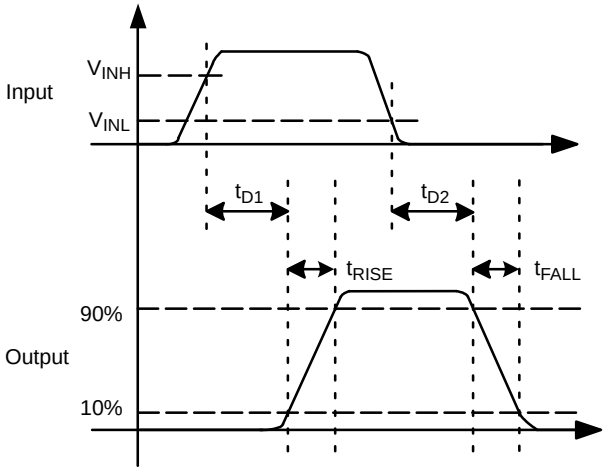

Figure 7. Non−Inverting (EN HIGH or Floating)

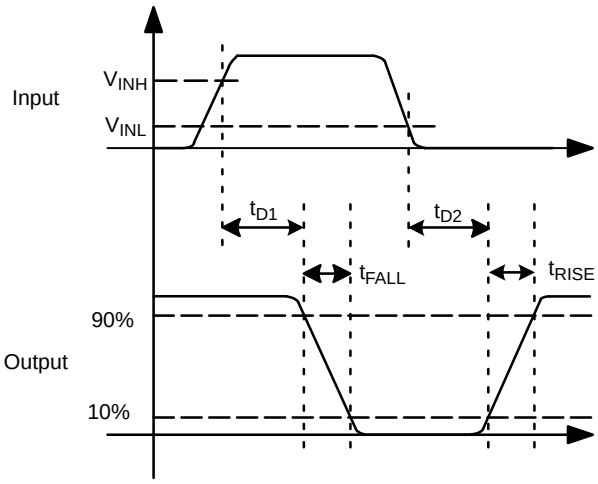

Figure 8. Inverting (EN HIGH or Floating)

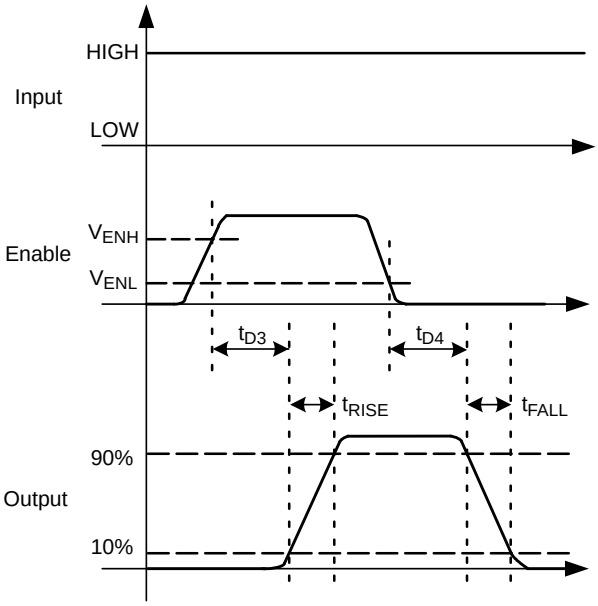

Figure 9. Non−Inverting (IN HIGH)

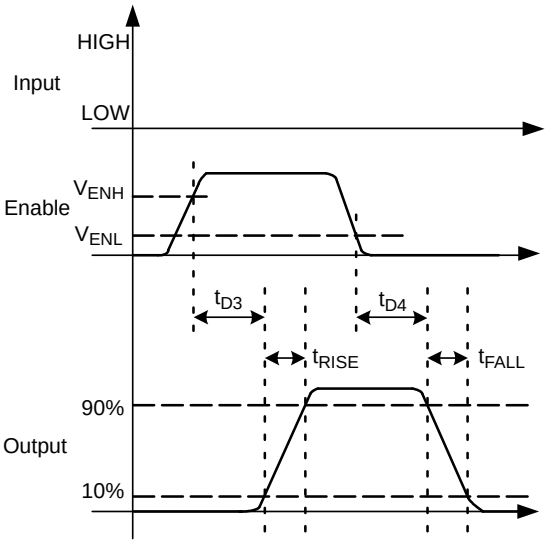

Figure 10. Inverting (IN LOW)

TYPICAL PERFORMANCE CHARACTERISTICS

Typical characteristics are provided at 25°C and V_{DD} = 12 V unless otherwise noted.

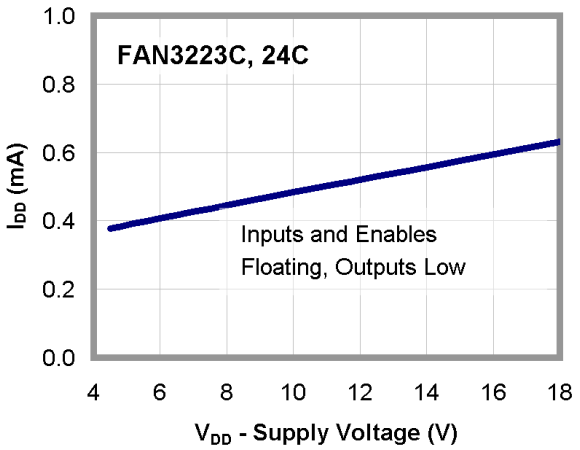

Figure 11. I_{DD} (Static) vs. Supply Voltage (Note 13)

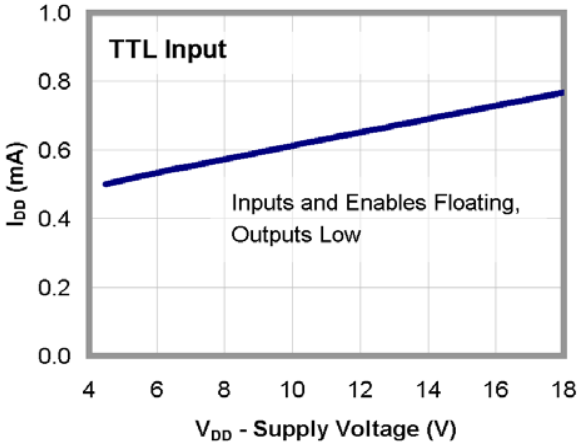

Figure 12. I_{DD} (Static) vs. Supply Voltage (Note 13)

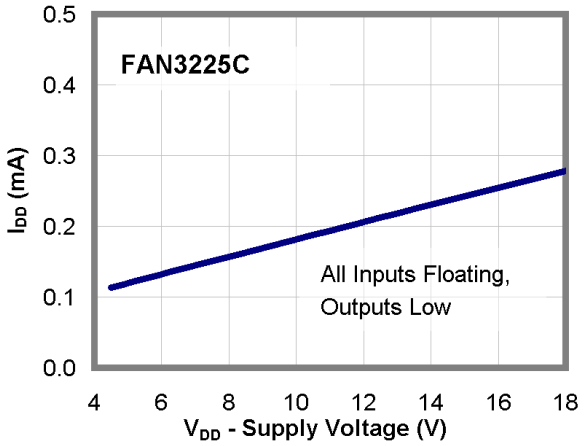

Figure 13. I_{DD} (Static) vs. Supply Voltage (Note 13)

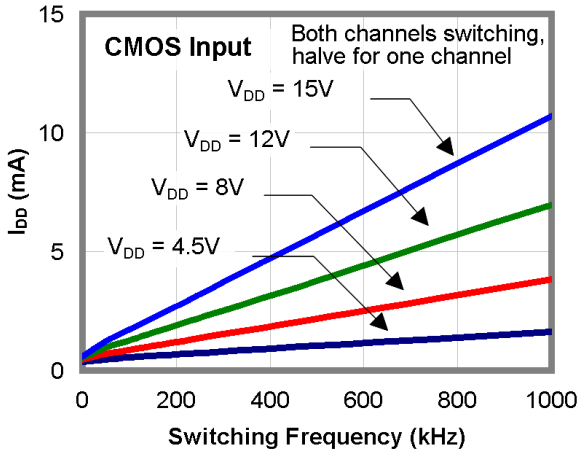

Figure 14. I_{DD} (No−Load) vs. Frequency

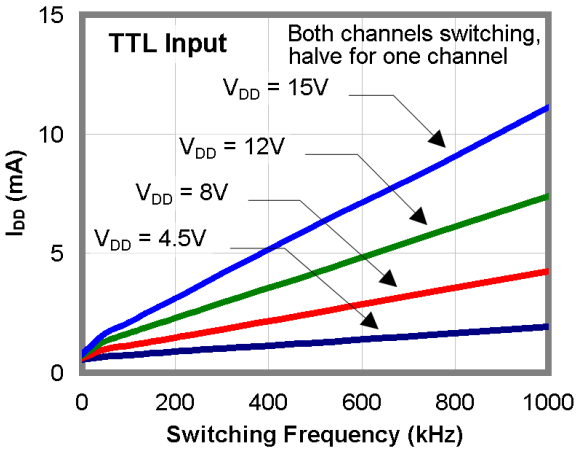

Figure 15. I_{DD} (No−Load) vs. Frequency

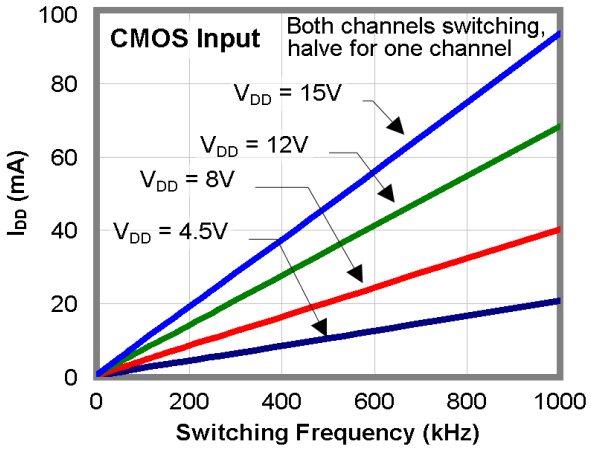

Figure 16. I_{DD} (2.2 nF Load) vs. Frequency

TYPICAL PERFORMANCE CHARACTERISTICS

Typical characteristics are provided at 25°C and V_{DD} = 12 V unless otherwise noted. (continued)

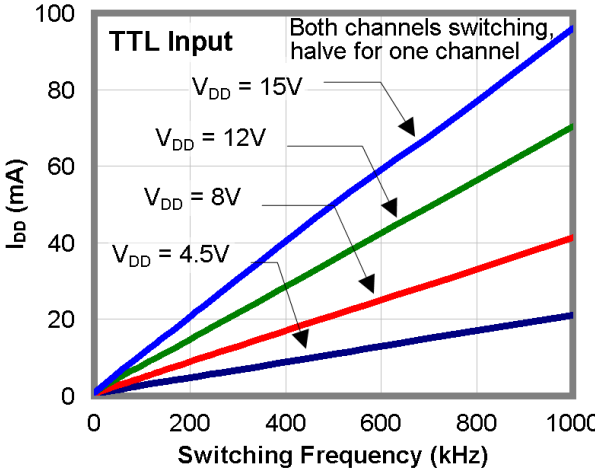

Figure 17. I_{DD} (2.2 nF Load) vs. Frequency

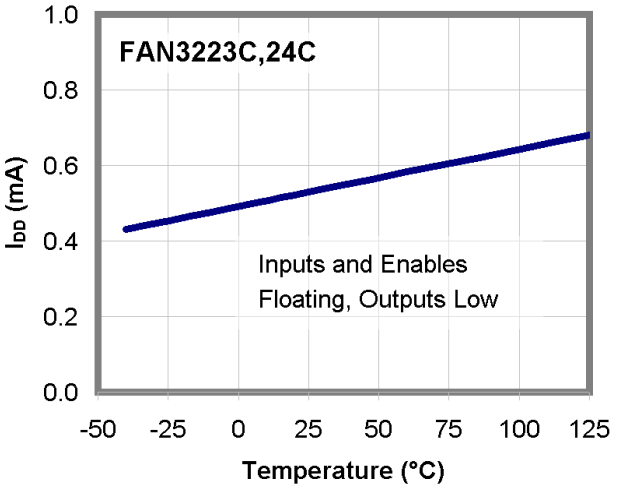

Figure 18. I_{DD} (Static) vs. Temperature (Note 13)

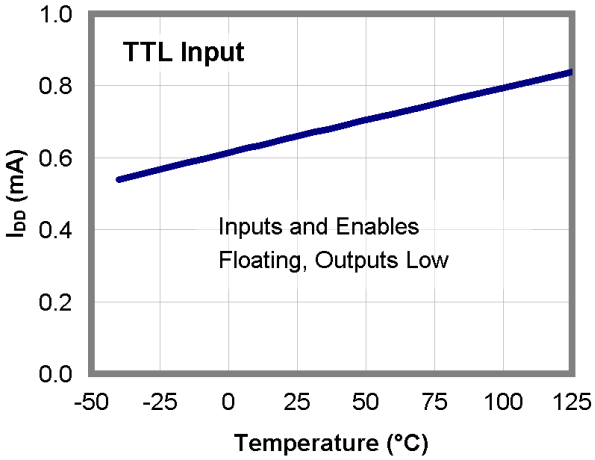

Figure 19. I_{DD} (Static) vs. Temperature (Note 13)

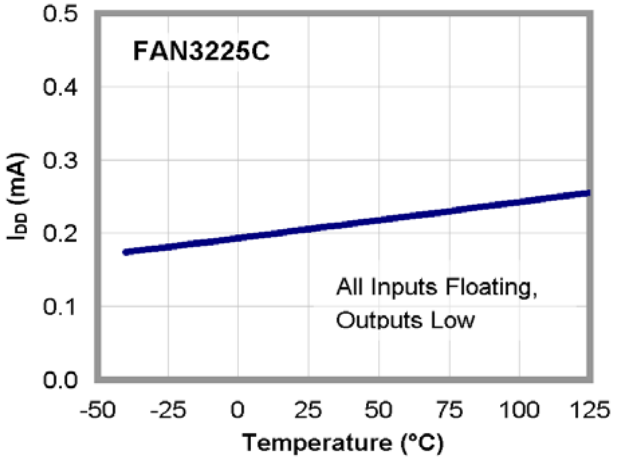

Figure 20. I_{DD} (Static) vs. Temperature (Note 13)

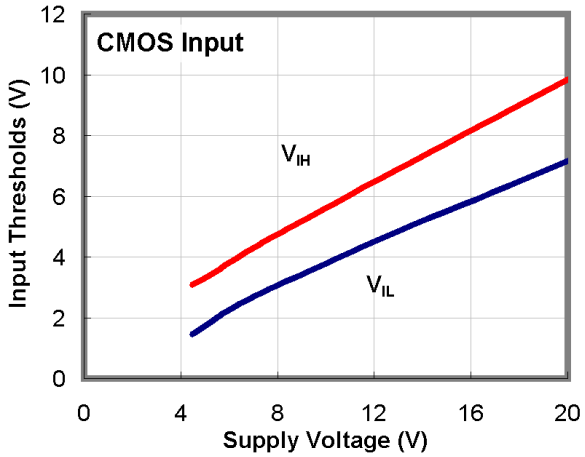

Figure 21. Input Thresholds vs. Supply Voltage

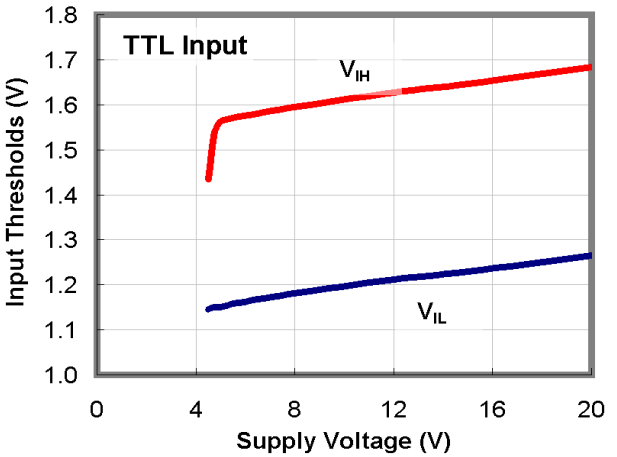

Figure 22. Input Thresholds vs. Supply Voltage

TYPICAL PERFORMANCE CHARACTERISTICS

Typical characteristics are provided at 25°C and V_{DD} = 12 V unless otherwise noted. (continued)

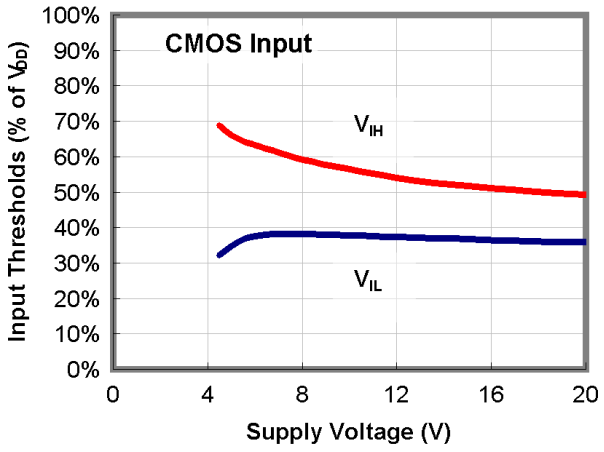

Figure 23. Input Threshold % vs. Supply Voltage

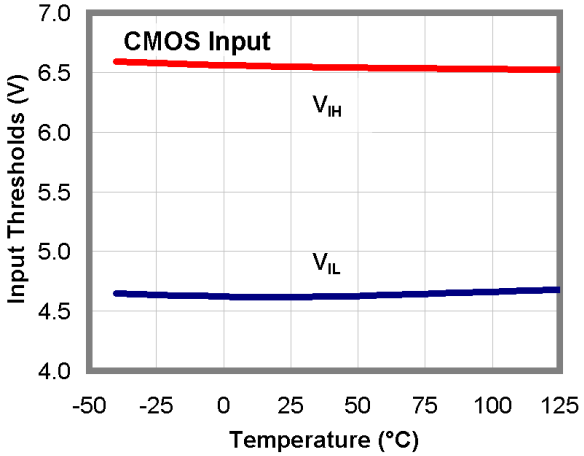

Figure 24. Input Thresholds vs. Temperature

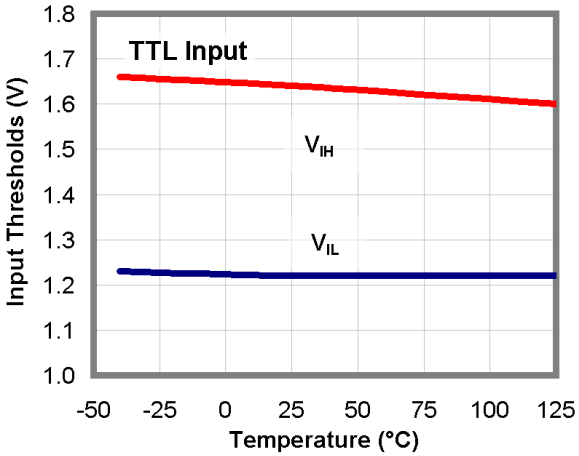

Figure 25. Input Thresholds vs. Temperature

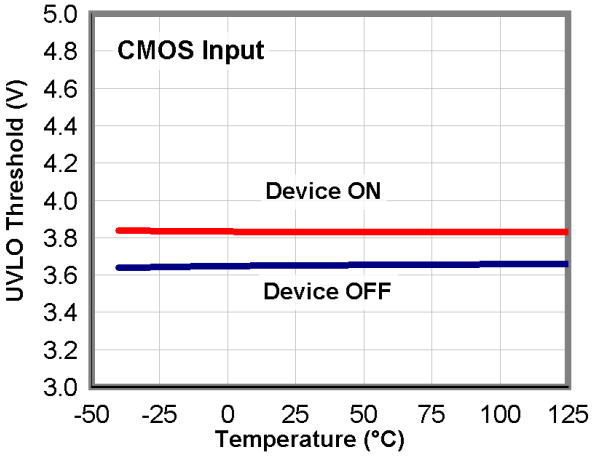

Figure 26. UVLO Thresholds vs. Temperature

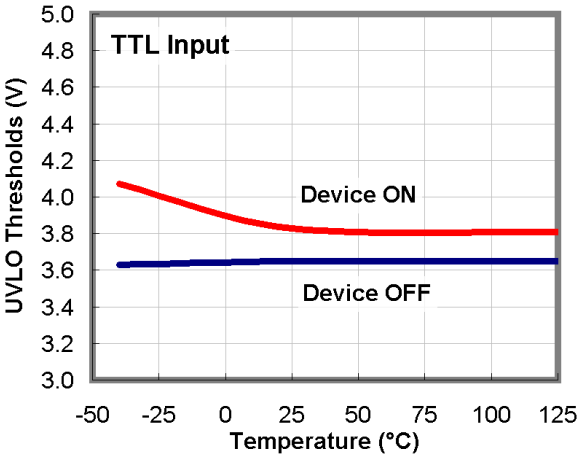

Figure 27. UVLO Threshold vs. Temperature

TYPICAL PERFORMANCE CHARACTERISTICS

Typical characteristics are provided at 25°C and V_{DD} = 12 V unless otherwise noted. (continued)

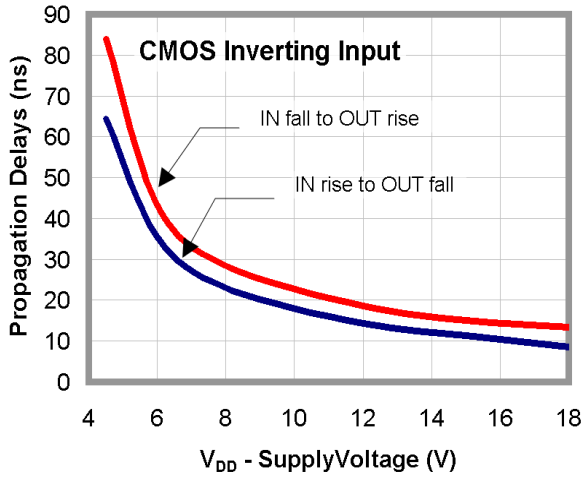

Figure 28. Propagation Delay vs. Supply Voltage

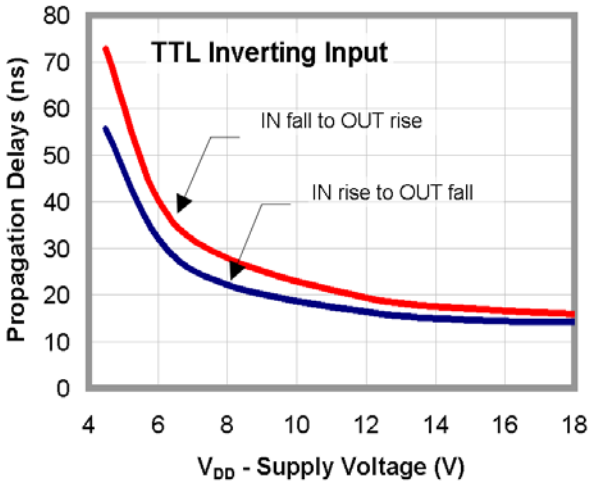

Figure 29. Propagation Delay vs. Supply Voltage

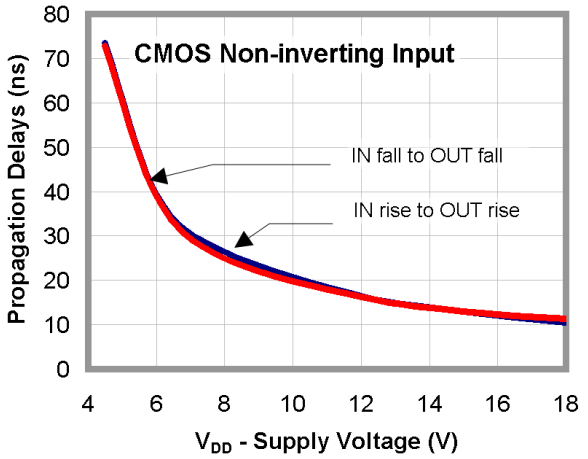

Figure 30. Propagation Delay vs. Supply Voltage

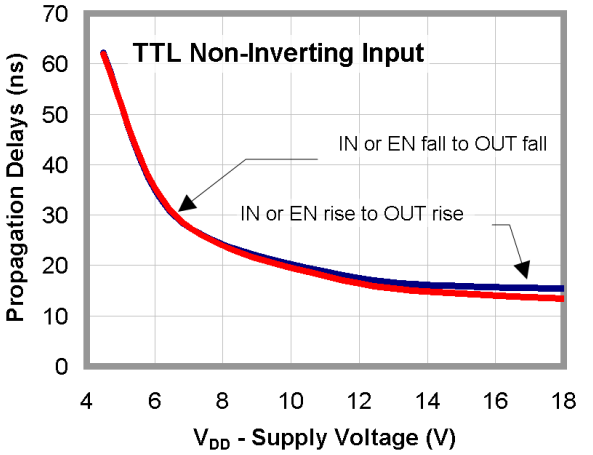

Figure 31. Propagation Delay vs. Supply Voltage

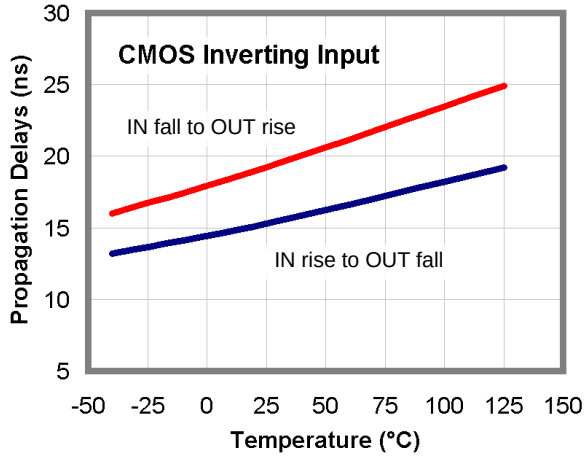

Figure 32. Propagation Delays vs. Temperature

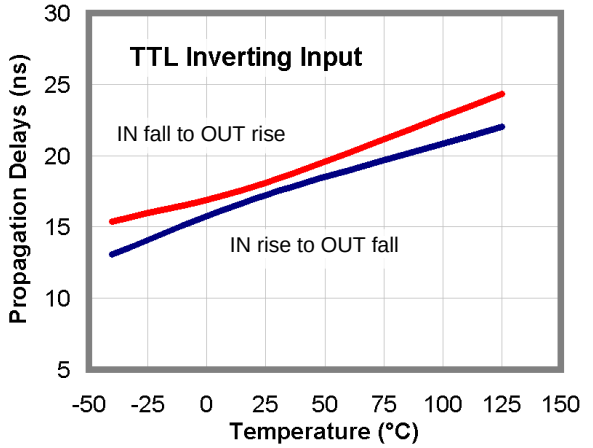

Figure 33. Propagation Delays vs. Temperature

TYPICAL PERFORMANCE CHARACTERISTICS

Typical characteristics are provided at 25°C and V_{DD} = 12 V unless otherwise noted. (continued)

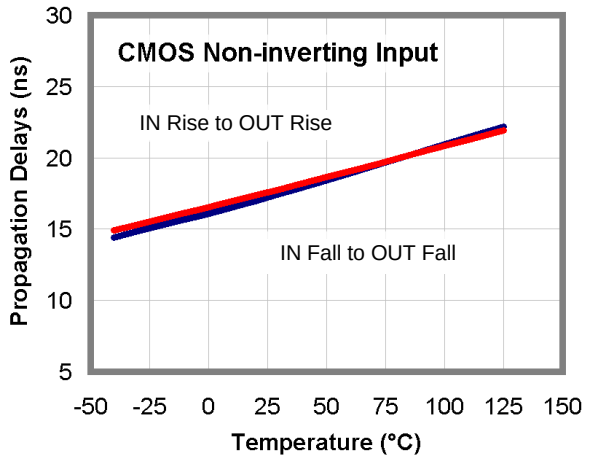

Figure 34. Propagation Delays vs. Temperature

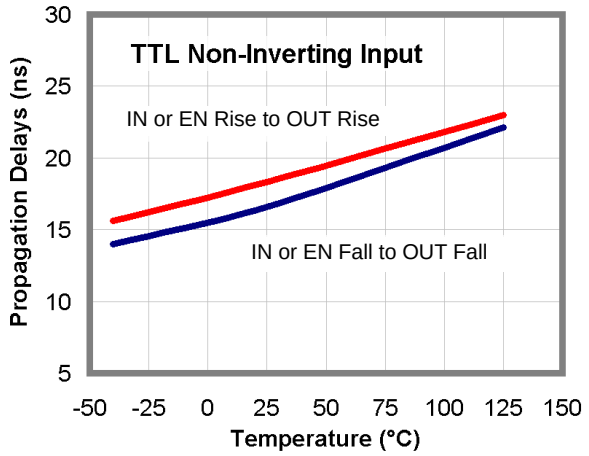

Figure 35. Propagation Delays vs. Temperature

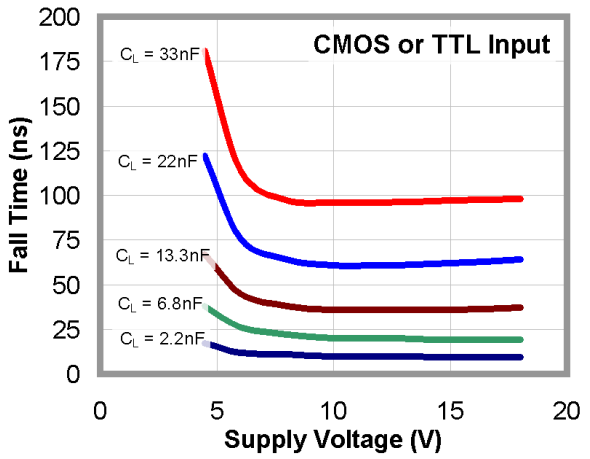

Figure 36. Fall Time vs. Supply Voltage

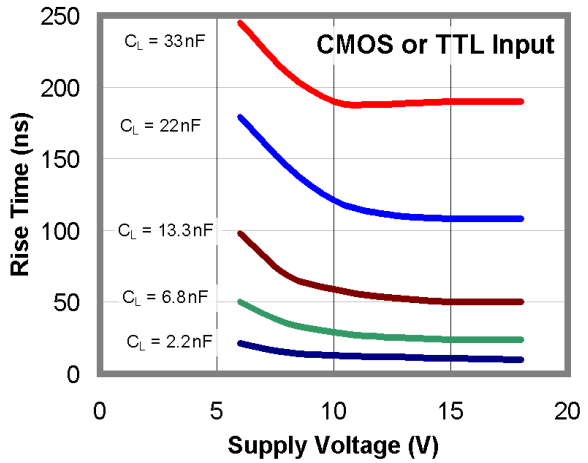

Figure 37. Rise Time vs. Supply Voltage

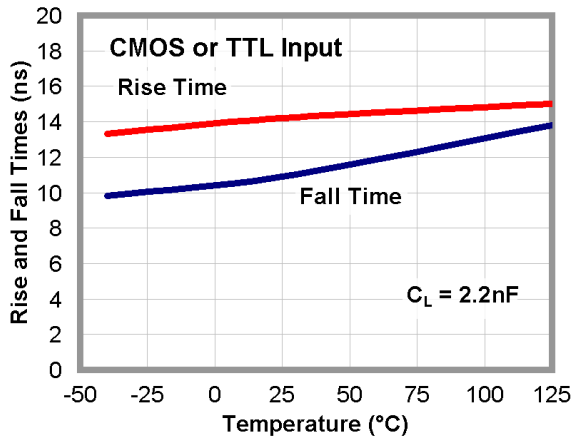

Figure 38. Rise and Fall Times vs. Temperature

TYPICAL PERFORMANCE CHARACTERISTICS

Typical characteristics are provided at 25°C and V_{DD} = 12 V unless otherwise noted. (continued)

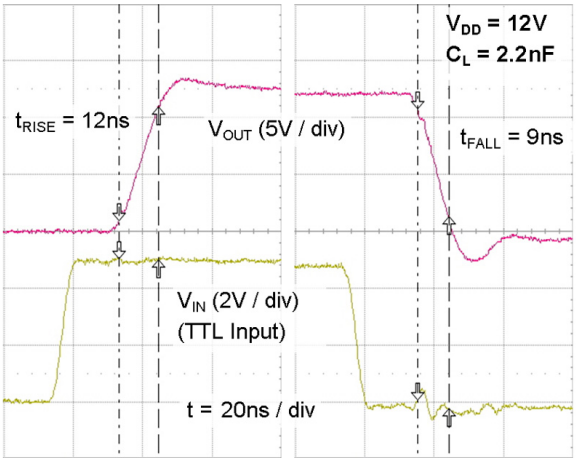

Figure 39. Rise/Fall Waveforms with 2.2 nF Load

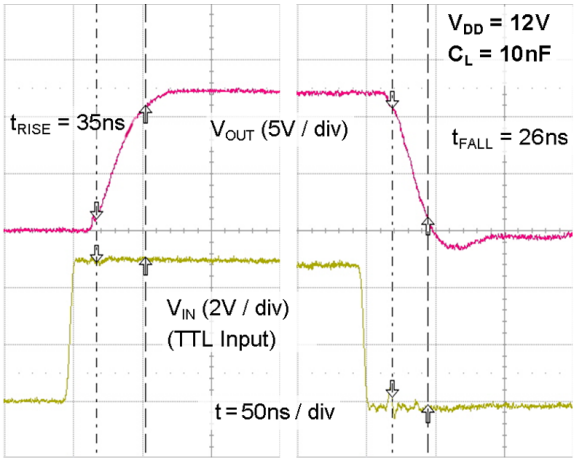

Figure 40. Rise/Fall Waveforms with 10 nF Load

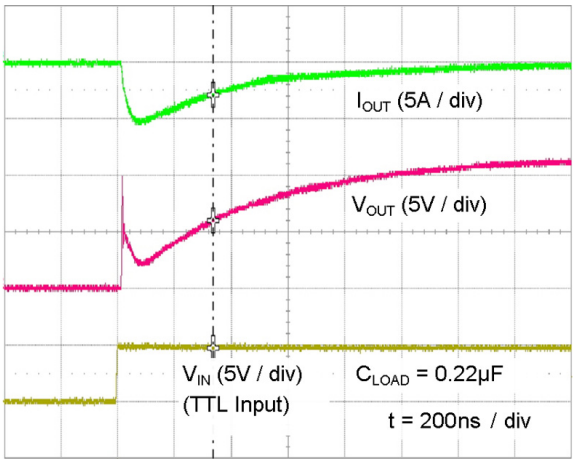

Figure 41. Quasi−Static Source Current with V_{DD} = 12 V (Note 14)

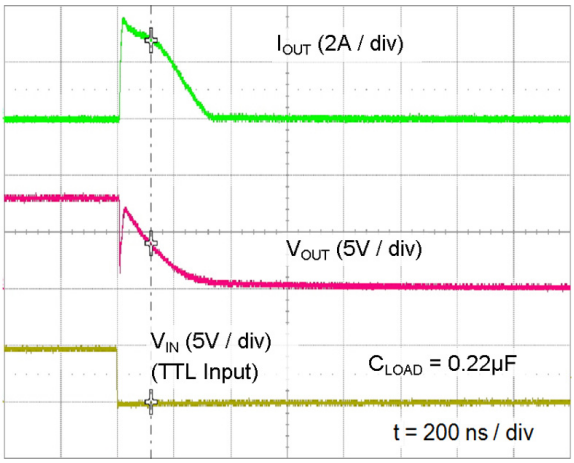

Figure 42. Quasi−Static Sink Current with V_{DD} = 12 V (Note 14)

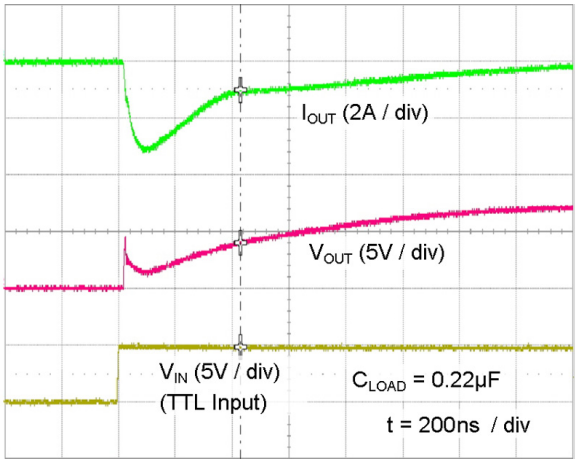

Figure 43. Quasi−Static Source Current with V_{DD} = 8 V (Note 14)

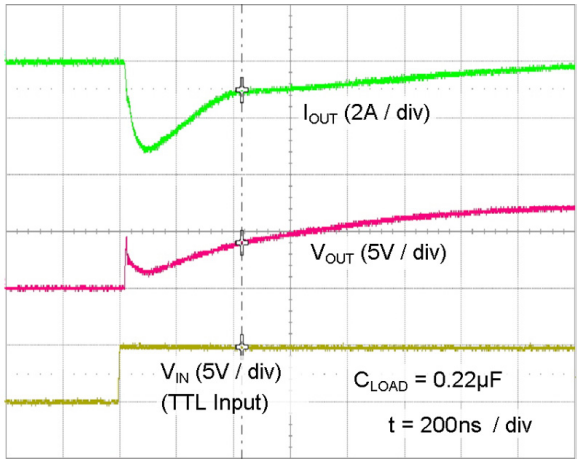

Figure 44. Quasi−Static Sink Current with V_{DD} = 8 V (Note 14)

13. For any inverting inputs pulled low, non−inverting inputs pulled high, or outputs driven high, static I_{DD} increases by the current flowing through the corresponding pull−up/down resistor shown in the block diagram.
14. The initial spike in each current waveform is a measurement artifact caused by the stray inductance of the current−measurement loop.

TEST CIRCUIT

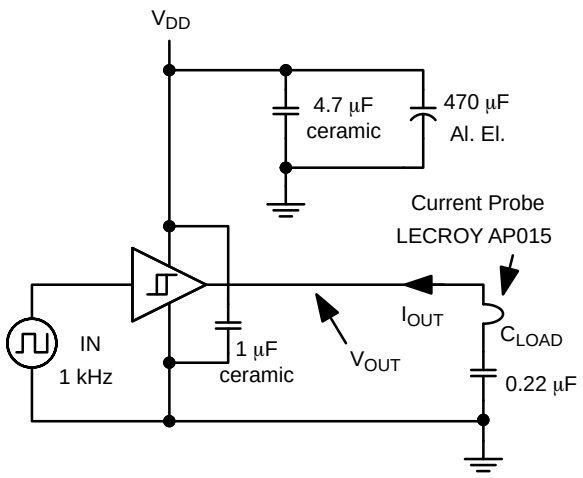

Figure 45. Quasi−Static I_{OUT} / V_{OUT} Test Circuit

APPLICATIONS INFORMATION

Input Thresholds

Each member of the FAN322x driver family consists of two identical channels that may be used independently at rated current or connected in parallel to double the individual current capacity. In the FAN3223 and FAN3224, channels A and B can be enabled or disabled independently using ENA or ENB, respectively. The EN pin has TTL thresholds for parts with either CMOS or TTL input thresholds. If ENA and ENB are not connected, an internal pull−up resistor enables the driver channels by default. ENA and ENB have TTL thresholds in parts with either TTL or CMOS INx threshold.

If the channel A and channel B inputs and outputs are connected in parallel to increase the driver current capacity, ENA and ENB should be connected and driven together. In addition, it is recommended to include an individual gate resistance for each channel output to limit the shoot through current possibly happening between the two channels due to variations in propagation delay or in input threshold between the two channels.

The FAN322x family offers versions in either TTL or CMOS input thresholds. In the FAN322xT, the input thresholds meet industry-standard TTL-logic thresholds independent of the V_{DD} voltage, and there is a hysteresis voltage of approximately 0.4 V. These levels permit the inputs to be driven from a range of input logic signal levels for which a voltage over 2 V is considered logic HIGH. The driving signal for the TTL inputs should have fast rising and falling edges with a slew rate of 6 V/μs or faster, so a rise time from 0 to 3.3 V should be 550 ns or less. With reduced slew rate, circuit noise could cause the driver input voltage to exceed the hysteresis voltage and retrigger the driver input, causing erratic operation.

In the FAN322xC, the logic input thresholds are dependent on the V_{DD} level and, with V_{DD} of 12 V, the logic rising edge threshold is approximately 55% of V_{DD} and the input falling edge threshold is approximately 38% of V_{DD}. The CMOS input configuration offers a hysteresis voltage of approximately 17% of V_{DD}. The CMOS inputs can be used with relatively slow edges (approaching DC) if good decoupling and bypass techniques are incorporated in the system design to prevent noise from violating the input voltage hysteresis window. This allows setting precise timing intervals by fitting an R−C circuit between the controlling signal and the IN pin of the driver. The slow rising edge at the IN pin of the driver introduces a delay between the controlling signal and the OUT pin of the driver.

Static Supply Current

In the I_{DD} (static) typical performance characteristics *(*Figure 11 − Figure 13 and Figure 18 − Figure 20*)*, the curve is produced with all inputs/enables floating (OUT is low) and indicates the lowest static I_{DD} current for the tested configuration. For other states, additional current flows through the 100 kΩ resistors on the inputs and outputs shown in the block diagram of each part *(*see Figure 4 − Figure 6*)*. In these cases, the actual static I_{DD} current is the value obtained from the curves plus this additional current.

MillerDrive Gate Drive Technology

FAN322x gate drivers incorporate the MillerDrive architecture shown in Figure 46. For the output stage, a combination of bipolar and MOS devices provide large currents over a wide range of supply voltage and temperature variations. The bipolar devices carry the bulk of the current as OUT swings between 1/3 to 2/3 V_{DD} and the MOS devices pull the output to the HIGH or LOW rail.

The purpose of the MillerDrive architecture is to speed up switching by providing high current during the Miller plateau region when the gate−drain capacitance of the MOSFET is being charged or discharged as part of the turn−on / turn−off process.

For applications that have zero voltage switching during the MOSFET turn−on or turn−off interval, the driver supplies high peak current for fast switching even though the Miller plateau is not present. This situation often occurs in synchronous rectifier applications because the body diode is generally conducting before the MOSFET is switched ON.

The output pin slew rate is determined by V_{DD} voltage and the load on the output. It is not user adjustable, but a series resistor can be added if a slower rise or fall time at the MOSFET gate is needed.

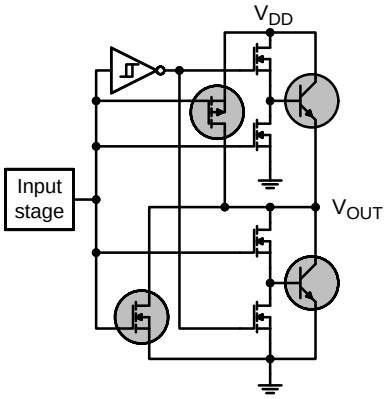

Figure 46. MillerDrive Output Architecture

Under−Voltage Lockout

The FAN322x startup logic is optimized to drive ground-referenced N−channel MOSFETs with an under−voltage lockout (UVLO) function to ensure that the IC starts up in an orderly fashion. When V_{DD} is rising, yet below the UVLO level, this circuit holds the output LOW, regardless of the status of the input pins. After the part is active, the supply voltage must drop 0.2 V before the part shuts down. This hysteresis helps prevent chatter when low V_{DD} supply voltages have noise from the power switching. This configuration is not suitable for driving high−side P−channel MOSFETs because the low output voltage of the driver would turn the P−channel MOSFET ON with V_{DD} below the UVLO level.

V_{DD} Bypass Capacitor Guidelines

To enable this IC to turn a device ON quickly, a local high-frequency bypass capacitor, C_{BYP}, with low ESR and ESL should be connected between the VDD and GND pins with minimal trace length. This capacitor is in addition to the bulk electrolytic capacitance of 10 μF to 47 μF commonly found on the driver and controller bias circuits.

A typical criterion for choosing the value of C_{BYP} is to keep the ripple voltage on the V_{DD} supply to ≤5%. This is often achieved with a value ≥20 times the equivalent load capacitance C_{EQV}, defined here as Q_{GATE}/V_{DD}. Ceramic capacitors of 0.1 μF to 1 μF or larger are common choices, as are dielectrics, such as X5R and X7R with good temperature characteristics and high pulse current capability.

If circuit noise affects normal operation, the value of C_{BYP} may be increased to 50−100 times the C_{EQV}, or C_{BYP} may be split into two capacitors. One should be a larger value, based on equivalent load capacitance, and the other a smaller value, such as 1−10 nF mounted closest to the VDD and GND pins to carry the higher frequency components of the current pulses. The bypass capacitor must provide the pulsed current from both of the driver channels and, if the drivers are switching simultaneously, the combined peak current sourced from the C_{BYP} would be twice as large as when a single channel is switching.

Layout and Connection Guidelines

The FAN3223−25 family of gate drivers incorporates fast-reacting input circuits, short propagation delays, and powerful output stages capable of delivering current peaks over 4 A to facilitate voltage transition times from under 10 ns to over 150 ns. The following layout and connection guidelines are strongly recommended:

- Keep high−current output and power ground paths separate logic and enable input signals and signal ground paths. This is especially critical when dealing with TTL−level logic thresholds at driver inputs and enable pins
- Keep the driver as close to the load as possible to minimize the length of high-current traces. This reduces the series inductance to improve high-speed switching, while reducing the loop area that can radiate EMI to the driver inputs and surrounding circuitry
- If the inputs to a channel are not externally connected, the internal 100 kΩ resistors indicated on block diagrams command a low output. In noisy environments, it may be necessary to tie inputs of an unused channel to VDD or GND using short traces to prevent noise from causing spurious output switching

- Many high-speed power circuits can be susceptible to noise injected from their own output or other external sources, possibly causing output re−triggering. These effects can be obvious if the circuit is tested in breadboard or non−optimal circuit layouts with long input, enable, or output leads.
  For best results, make connections to all pins as short and direct as possible
- The FAN322x is compatible with many other industry-standard drivers. In single input parts with enable pins, there is an internal 100 kΩ resistor tied to VDD to enable the driver by default; this should be considered in the PCB layout
- The turn−on and turn−off current paths should be minimized, as discussed in the following section

Figure 47 shows the pulsed gate drive current path when the gate driver is supplying gate charge to turn the MOSFET ON. The current is supplied from the local bypass capacitor, C_{BYP}, and flows through the driver to the MOSFET gate and to ground. To reach the high peak currents possible, the resistance and inductance in the path should be minimized. The localized C_{BYP} acts to contain the high peak current pulses within this driver−MOSFET circuit, preventing them from disturbing the sensitive analog circuitry in the PWM controller.

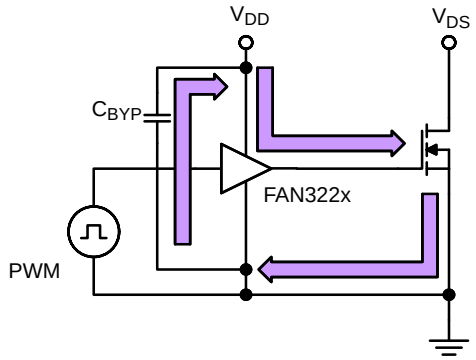

Figure 47. Current Path for MOSFET Turn−On

Figure 48 shows the current path when the gate driver turns the MOSFET OFF. Ideally, the driver shunts the current directly to the source of the MOSFET in a small circuit loop. For fast turn−off times, the resistance and inductance in this path should be minimized.

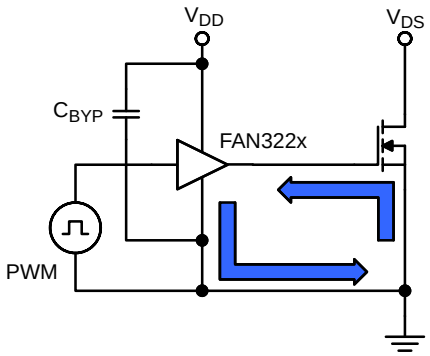

Figure 48. Current Path for MOSFET Turn−Off

Truth Table of Logic Operation

The FAN3225 truth table indicates the operational states using the dual−input configuration. In a non−inverting driver configuration, the IN− pin should be a logic LOW signal. If the IN− pin is connected to logic HIGH, a disable function is realized, and the driver output remains LOW regardless of the state of the IN+ pin.

IN+	IN−	OUT
0	0	0
0	1	0
1	0	1
1	1	0

In the non−inverting driver configuration in Figure 49, the IN− pin is tied to ground and the input signal (PWM) is applied to IN+ pin. The IN− pin can be connected to logic HIGH to disable the driver and the output remains LOW, regardless of the state of the IN+ pin.

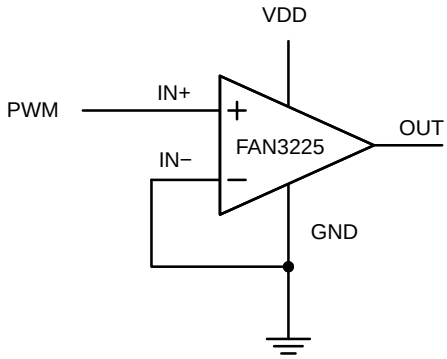

Figure 49. Dual−Input Driver Enabled, Non−Inverting Configuration

In the inverting driver application in Figure 50, the IN+ pin is tied HIGH. Pulling the IN+ pin to GND forces the output LOW, regardless of the state of the IN− pin.

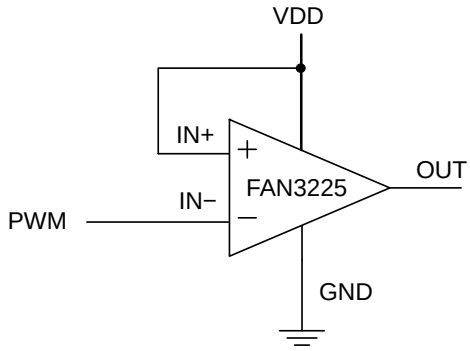

Figure 50. Dual−Input Driver Enabled, Inverting Configuration

Operational Waveforms

At power-up, the driver output remains LOW until the V_{DD} voltage reaches the turn−on threshold. The magnitude of the OUT pulses rises with V_{DD} until steady−state V_{DD} is reached. The non−inverting operation illustrated in Figure 51 shows that the output remains LOW until the UVLO threshold is reached, then the output is in−phase with the input.

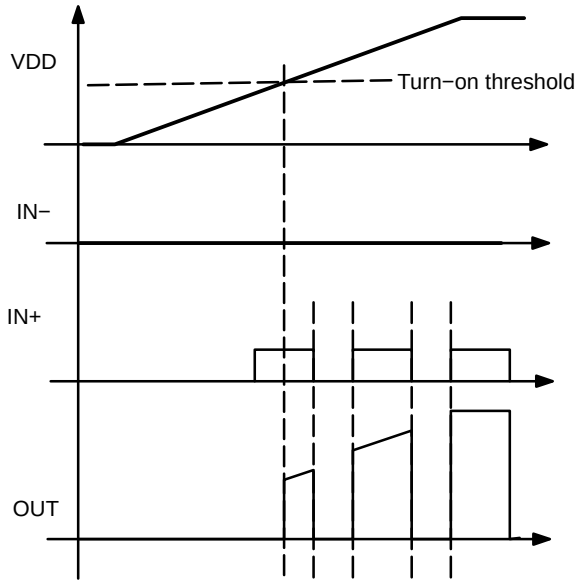

Figure 51. Non−Inverting Startup Waveforms

For the inverting configuration of Figure 50, startup waveforms are shown in Figure 52. With IN+ tied to VDD and the input signal applied to IN–, the OUT pulses are inverted with respect to the input. At power-up, the inverted output remains LOW until the V_{DD} voltage reaches the turn−on threshold, then it follows the input with inverted phase.

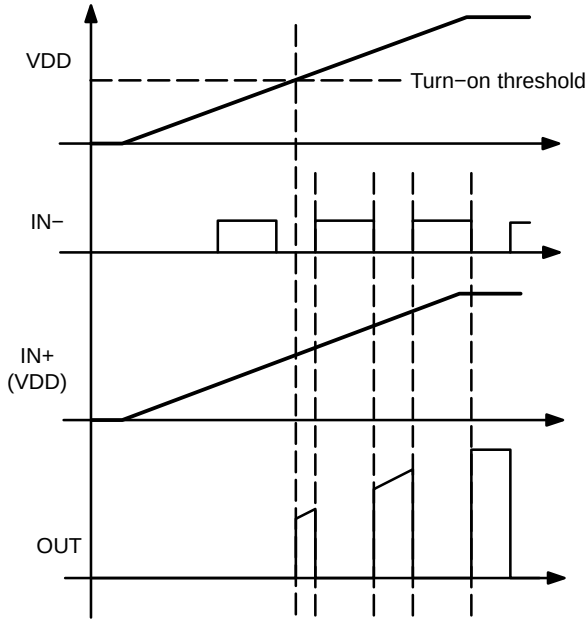

Figure 52. Inverting Startup Waveforms

Thermal Guidelines

Gate drivers used to switch MOSFETs and IGBTs at high frequencies can dissipate significant amounts of power. It is important to determine the driver power dissipation and the resulting junction temperature in the application to ensure that the part is operating within acceptable temperature limits.

The total power dissipation in a gate driver is the sum of two components, P_{GATE} and $P_{DYNAMIC}$:

$$P_{TOTAL} = P_{GATE} + P_{DYNAMIC} \qquad \text{(eq. 1)}$$

P_{GATE} (Gate Driving Loss): The most significant power loss results from supplying gate current (charge per unit time) to switch the load MOSFET on and off at the switching frequency. The power dissipation that results from driving a MOSFET at a specified gate−source voltage, V_{GS}, with gate charge, Q_G, at switching frequency, f_{SW}, is determined by:

$$P_{GATE} = Q_G \times V_{GS} \times f_{SW} \times n \qquad \text{(eq. 2)}$$

where n is the number of driver channels in use (1 or 2).

$P_{DYNAMIC}$ (Dynamic Pre−Drive / Shoot−through Current): A power loss resulting from internal current consumption under dynamic operating conditions, including pin pull−up / pull−down resistors. The internal current consumption ($I_{DYNAMIC}$) can be estimated using the graphs in Figure 14 and Figure 15 of the Typical Performance Characteristics to determine the current $I_{DYNAMIC}$ drawn from V_{DD} under actual operating conditions:

$$P_{DYNAMIC} = I_{DYNAMIC} \times V_{DD} \times n \qquad \text{(eq. 3)}$$

where n is the number of driver ICs in use. Note that n is usually be one IC even if the IC has two channels, unless two or more.driver ICs are in parallel to drive a large load.

Once the power dissipated in the driver is determined, the driver junction rise with respect to circuit board can be evaluated using the following thermal equation, assuming Ψ_{JB} was determined for a similar thermal design (heat sinking and air flow):

$$T_J = P_{TOTAL} \times \psi_{JB} + T_B \qquad \text{(eq. 4)}$$

where:

T_J = driver junction temperature;
Ψ_{JB} = (psi) thermal characterization parameter relating temperature rise to total power dissipation; and
T_B = board temperature in location as defined in the Thermal Characteristics table.

To give a numerical example, assume for a 12 V V_{DD} (V_{BIAS}) system, the synchronous rectifier switches of Figure 56 have a total gate charge of 60 nC at V_{GS} = 7 V. Therefore, two devices in parallel would have 120 nC gate charge. At a switching frequency of 300 kHz, the total power dissipation is:

$$P_{GATE} = 120\text{nC} \times 7\text{ V} \times 300\text{ kHz} \times 2 = 0.504\text{ W} \qquad \text{(eq. 5)}$$

$$P_{DYNAMIC} = 3.0\text{ mA} \times 12\text{ V} \times 1 = 0.036\text{ W} \qquad \text{(eq. 6)}$$

$$P_{TOTAL} = 0.540\text{ W} \qquad \text{(eq. 7)}$$

The SOIC−8 has a junction−to−board thermal characterization parameter of Ψ_{JB} = 42°C/W. In a system application, the localized temperature around the device is a function of the layout and construction of the PCB along with airflow across the surfaces. To ensure reliable operation, the maximum junction temperature of the device must be prevented from exceeding the maximum rating of 150°C; with 80% derating, T_J would be limited to 120°C. Rearranging Equation 4 determines the board temperature required to maintain the junction temperature below 120°C:

$$T_{B,\,MAX} = T_J - P_{TOTAL} \times \psi_{JB} \qquad \text{(eq. 8)}$$

$$T_{B,\,MAX} = 120°\text{C} - 0.54\text{ W} \times 42°\text{C/W} = 97°\text{C} \qquad \text{(eq. 9)}$$

TYPICAL APPLICATION DIAGRAMS

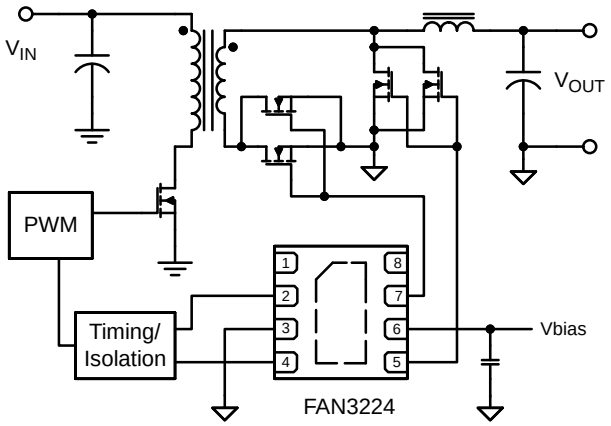

Figure 53. High Current Forward Converter with Synchronous Rectification

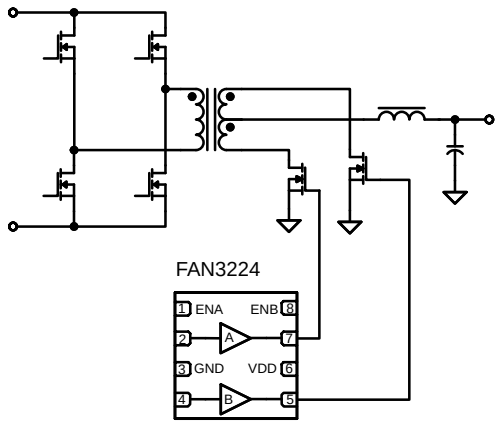

Figure 54. Center−Tapped Bridge Output with Synchronous Rectifiers

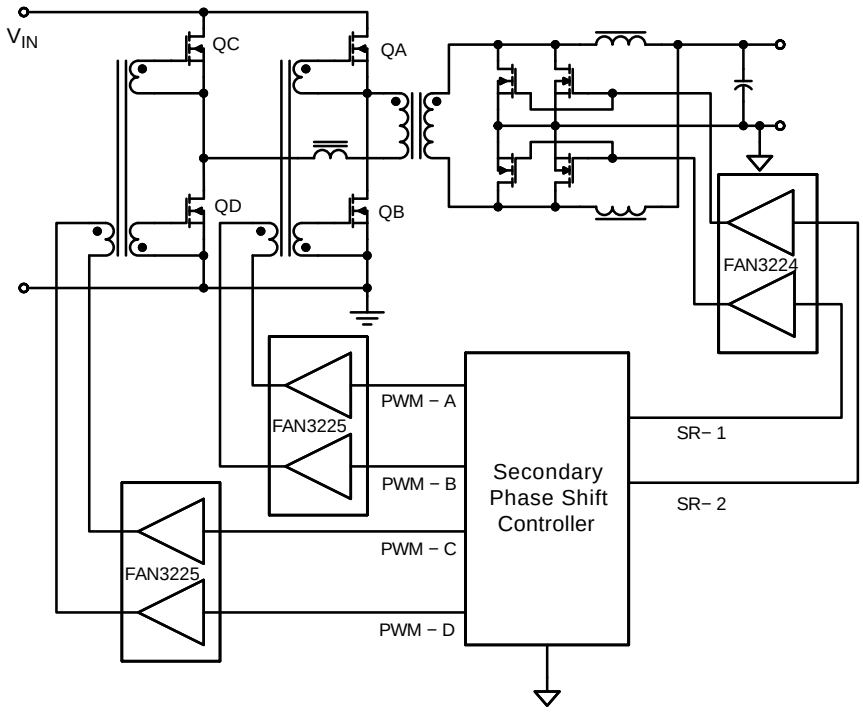

Figure 55. Secondary Controlled Full Bridge with Current Doubler Output, Synchronous Rectifiers (Simplified)

ORDERING INFORMATION

Part Number	Logic	Input Threshold	Package	Packing Method	Quantity per Reel
FAN3223TMPX	Dual Inverting Channels + Dual Enable	TTL	3x3 mm MLP−8	Tape & Reel	3,000
FAN3224CMPX	Dual Non−Inverting Channels + Dual Enable	CMOS	3x3 mm MLP−8	Tape & Reel	3,000
FAN3224CMX			SOIC−8	Tape & Reel	2,500
FAN3224TMPX (Note 15)		TTL	3x3 mm MLP−8	Tape & Reel	3,000
FAN3224TMX	Dual Non−Inverting Channels + Dual Enable	TTL	SOIC−8	Tape & Reel	2,500
FAN3225TMPX	Dual Channels of Two−Input / One−Output Drivers	TTL	3x3 mm MLP−8	Tape & Reel	3,000
FAN3225TMX			SOIC−8	Tape & Reel	2,500

DISCONTINUED (Note 16)

FAN3223CMPX	Dual Inverting Channels + Dual Enable	CMOS	3x3 mm MLP−8	Tape & Reel	3,000
FAN3223CMX			SOIC−8	Tape & Reel	2,500
FAN3223TMX		TTL	SOIC−8	Tape & Reel	2,500
FAN3224TMNTXG (Note 15)	Dual Non−Inverting Channels + Dual Enable	TTL	3x3 mm MLP−8	Tape & Reel	3,000
FAN3225CMPX	Dual Channels of Two−Input / One−Output Drivers	CMOS	3x3 mm MLP−8	Tape & Reel	3,000
FAN3225CMX			SOIC−8	Tape & Reel	2,500

15. FAN3224TMPX = Pin 1 location upper left in tape & reel for MLP−8.
    FAN3224TMNTXG = Pin 1 location upper right in tape & reel for MLP−8.
16. **DISCONTINUED:** These devices are not recommended for new design. Please contact your **onsemi** representative for information. The most current information on these devices may be available on www.onsemi.com.

RELATED PRODUCTS

Type	Part Number	Gate Drive (Note 18) (Sink/Src)	Input Threshold	Logic	Package
Single 1 A	FAN3111C	+1.1 A / −0.9 A	CMOS	Single Channel of Dual−Input/Single−Output	SOT23−5, MLP6
Single 1 A	FAN3111E	+1.1 A / −0.9 A	External (Note 18)	Single Non−Inverting Channel with External Reference	SOT23−5, MLP6
Single 2 A	FAN3100C	+2.5 A / −1.8 A	CMOS	Single Channel of Two−Input/One−Output	SOT23−5, MLP6
Single 2 A	FAN3100T	+2.5 A / −1.8 A	TTL	Single Channel of Two−Input/One−Output	SOT23−5, MLP6
Single 2 A	FAN3180	+2.4 A / −1.6 A	TTL	Single Non−Inverting Channel + 3.3 V LDO	SOT23−5
Dual 2 A	FAN3216T	+2.4 A / −1.6 A	TTL	Dual Inverting Channels	SOIC8
Dual 2 A	FAN3217T	+2.4 A / −1.6 A	TTL	Dual Non−Inverting Channels	SOIC8
Dual 2 A	FAN3226C	+2.4 A / −1.6 A	CMOS	Dual Inverting Channels + Dual Enable	SOIC8, MLP8
Dual 2 A	FAN3226T	+2.4 A / −1.6 A	TTL	Dual Inverting Channels + Dual Enable	SOIC8, MLP8
Dual 2 A	FAN3227C	+2.4 A / −1.6 A	CMOS	Dual Non−Inverting Channels + Dual Enable	SOIC8, MLP8
Dual 2 A	FAN3227T	+2.4 A / −1.6 A	TTL	Dual Non−Inverting Channels + Dual Enable	SOIC8, MLP8
Dual 2 A	FAN3228C	+2.4 A / −1.6 A	CMOS	Dual Channels of Two−Input/One−Output, Pin Config.1	SOIC8, MLP8
Dual 2 A	FAN3228T	+2.4 A / −1.6 A	TTL	Dual Channels of Two−Input/One−Output, Pin Config.1	SOIC8, MLP8
Dual 2 A	FAN3229C	+2.4 A / −1.6 A	CMOS	Dual Channels of Two−Input/One−Output, Pin Config.2	SOIC8, MLP8
Dual 2 A	FAN3229T	+2.4 A / −1.6 A	TTL	Dual Channels of Two−Input/One−Output, Pin Config.2	SOIC8, MLP8
Dual 2 A	FAN3268T	+2.4 A / −1.6 A	TTL	20 V Non−Inverting Channel (NMOS) and Inverting Channel (PMOS) + Dual Enables	SOIC8
Dual 2 A	FAN3278T	+2.4 A / −1.6 A	TTL	30 V Non−Inverting Channel (NMOS) and Inverting Channel (PMOS) + Dual Enables	SOIC8
Dual 4 A	FAN3213T	+4.3 A / −2.8 A	TTL	Dual Inverting Channels	SOIC8
Dual 4 A	FAN3214T	+4.3 A / −2.8 A	TTL	Dual Non−Inverting Channels	SOIC8
Dual 4 A	FAN3223C	+4.3 A / −2.8 A	CMOS	Dual Inverting Channels + Dual Enable	SOIC8, MLP8
Dual 4 A	FAN3223T	+4.3 A / −2.8 A	TTL	Dual Inverting Channels + Dual Enable	SOIC8, MLP8
Dual 4 A	FAN3224C	+4.3 A / −2.8 A	CMOS	Dual Non−Inverting Channels + Dual Enable	SOIC8, MLP8
Dual 4 A	FAN3224T	+4.3 A / −2.8 A	TTL	Dual Non−Inverting Channels + Dual Enable	SOIC8, MLP8, SOIC8−EP
Dual 4 A	FAN3225C	+4.3 A / −2.8 A	CMOS	Dual Channels of Two−Input/One−Output	SOIC8, MLP8
Dual 4 A	FAN3225T	+4.3 A / −2.8 A	TTL	Dual Channels of Two−Input/One−Output	SOIC8, MLP8
Single 9 A	FAN3121C	+9.7 A / −7.1 A	CMOS	Single Inverting Channel + Enable	SOIC8, MLP8
Single 9 A	FAN3121T	+9.7 A / −7.1 A	TTL	Single Inverting Channel + Enable	SOIC8, MLP8
Single 9 A	FAN3122T	+9.7 A / −7.1 A	TTL	Single Non−Inverting Channel + Enable	SOIC8, MLP8
Single 9 A	FAN3122C	+9.7 A / −7.1 A	CMOS	Single Non−Inverting Channel + Enable	SOIC8, MLP8
Dual 12 A	FAN3240	+12.0 A	TTL	Dual−Coil Relay Driver, Timing Config. 0	SOIC8
Dual 12 A	FAN3241	+12.0 A	TTL	Dual−Coil Relay Driver, Timing Config. 1	SOIC8

17. Typical currents with OUTx at 6 V and V_{DD} = 12 V.
18. Thresholds proportional to an externally supplied reference voltage.

MillerDrive is trademark of Semiconductor Components Industries, LLC dba “**onsemi**” or its affiliates and/or subsidiaries in the United States and/or other countries.

SCALE 2:1

WDFN8 3x3, 0.65P
CASE 511CD
ISSUE O

DATE 29 APR 2014

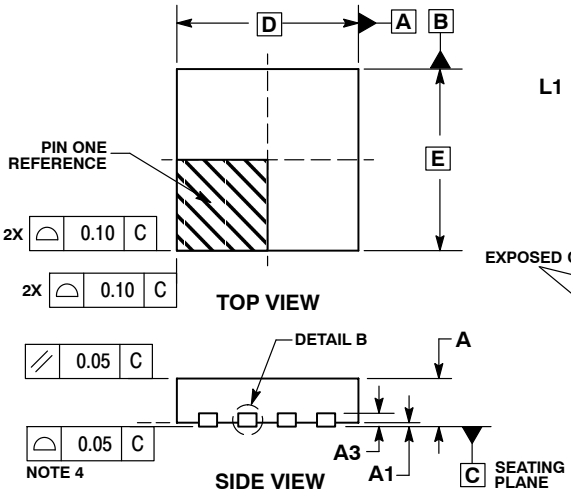

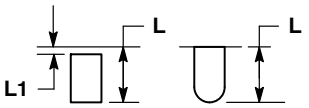

DETAIL A
ALTERNATE CONSTRUCTIONS

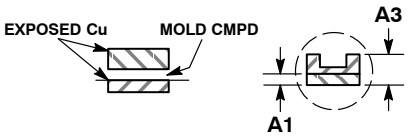

DETAIL B
ALTERNATE CONSTRUCTIONS

NOTES:
1. DIMENSIONING AND TOLERANCING PER ASME Y14.5M, 1994.
2. CONTROLLING DIMENSION: MILLIMETERS.
3. DIMENSION b APPLIES TO PLATED TERMINAL AND IS MEASURED BETWEEN 0.15 AND 0.30 MM FROM TERMINAL TIP.
4. COPLANARITY APPLIES TO THE EXPOSED PAD AS WELL AS THE TERMINALS.

	MILLIMETERS	
DIM	MIN	MAX
A	0.70	0.80
A1	0.00	0.05
A3	0.20 REF	
b	0.25	0.35
D	3.00 BSC	
D2	2.05	2.25
E	3.00 BSC	
E2	1.10	1.30
e	0.65 BSC	
K	0.20	---
L	0.30	0.50
L1	0.00	0.15

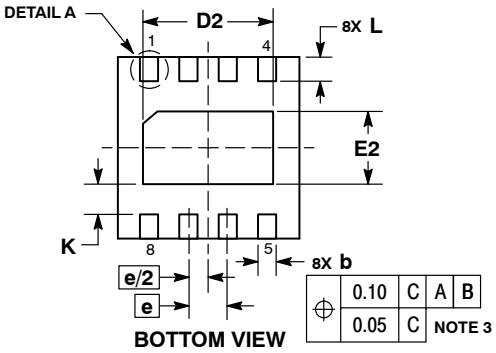

GENERIC MARKING DIAGRAM*

A = Assembly Location
L = Wafer Lot
Y = Year
W = Work Week
▪ = Pb−Free Package

(Note: Microdot may be in either location)

*This information is generic. Please refer to device data sheet for actual part marking. Pb−Free indicator, "G" or microdot "▪", may or may not be present. Some products may not follow the Generic Marking.

RECOMMENDED SOLDERING FOOTPRINT*

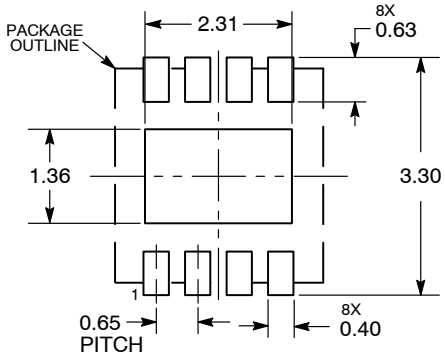

DIMENSIONS: MILLIMETERS

*For additional information on our Pb−Free strategy and soldering details, please download the **onsemi** Soldering and Mounting Techniques Reference Manual, SOLDERRM/D.

DOCUMENT NUMBER:	**98AON84944F**	Electronic versions are uncontrolled except when accessed directly from the Document Repository. Printed versions are uncontrolled except when stamped "CONTROLLED COPY" in red.
DESCRIPTION:	**WDFN8, 3X3, 0.65P**	**PAGE 1 OF 1**

onsemi and onsemi are trademarks of Semiconductor Components Industries, LLC dba **onsemi** or its subsidiaries in the United States and/or other countries. **onsemi** reserves the right to make changes without further notice to any products herein. **onsemi** makes no warranty, representation or guarantee regarding the suitability of its products for any particular purpose, nor does **onsemi** assume any liability arising out of the application or use of any product or circuit, and specifically disclaims any and all liability, including without limitation special, consequential or incidental damages. **onsemi** does not convey any license under its patent rights nor the rights of others.

SOIC8
CASE 751EB
ISSUE A

DATE 24 AUG 2017

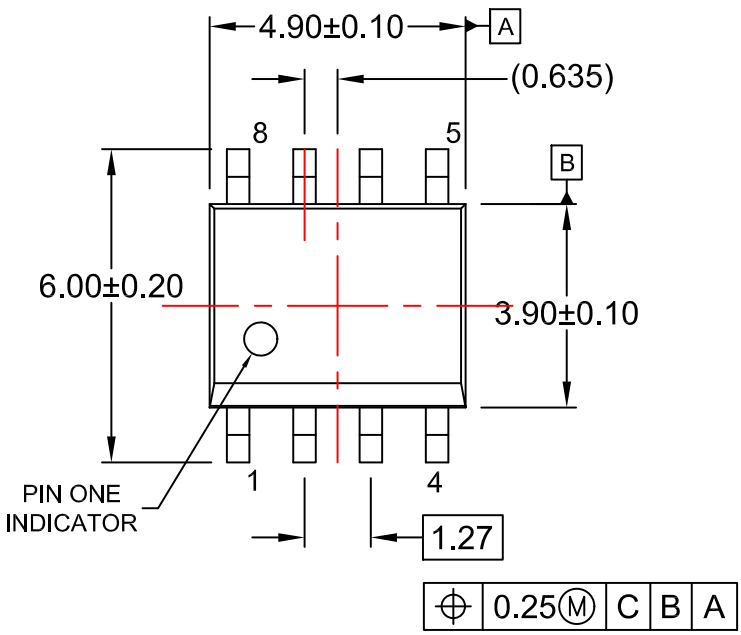

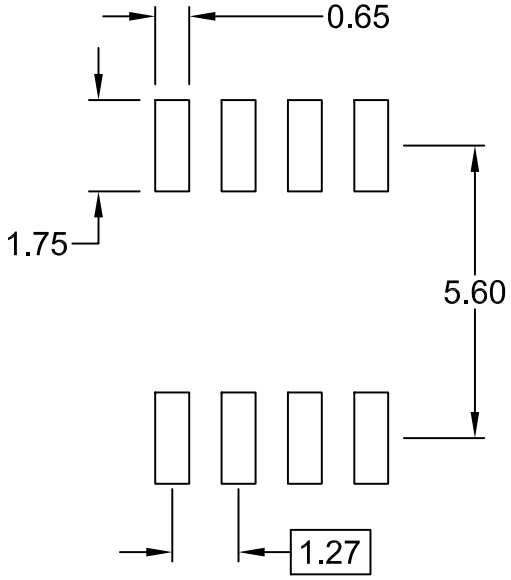

LAND PATTERN RECOMMENDATION

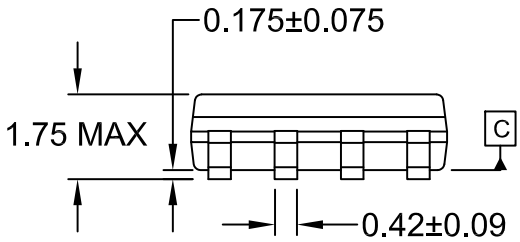

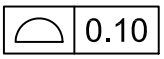

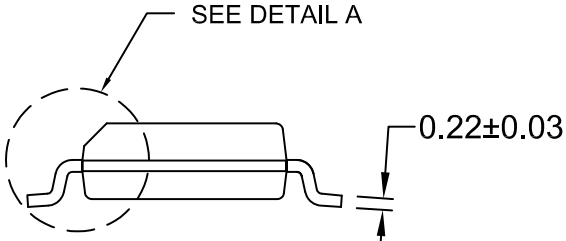

OPTION A - BEVEL EDGE

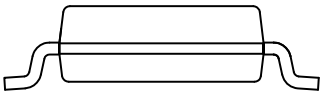

OPTION B - NO BEVEL EDGE

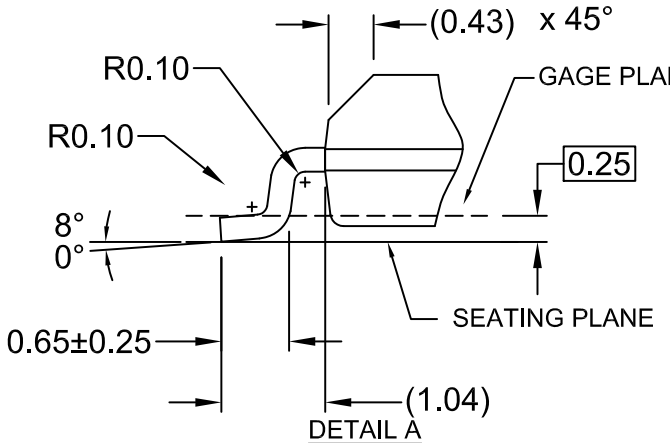

DETAIL A
SCALE: 2:1

NOTES:
A) THIS PACKAGE CONFORMS TO JEDEC MS-012, VARIATION AA.
B) ALL DIMENSIONS ARE IN MILLIMETERS.
C) DIMENSIONS DO NOT INCLUDE MOLD FLASH OR BURRS.
D) LANDPATTERN STANDARD: SOIC127P600X175-8M

DOCUMENT NUMBER:	**98AON13735G**	Electronic versions are uncontrolled except when accessed directly from the Document Repository. Printed versions are uncontrolled except when stamped "CONTROLLED COPY" in red.
DESCRIPTION:	**SOIC8**	**PAGE 1 OF 1**

onsemi and onsemi are trademarks of Semiconductor Components Industries, LLC dba **onsemi** or its subsidiaries in the United States and/or other countries. **onsemi** reserves the right to make changes without further notice to any products herein. **onsemi** makes no warranty, representation or guarantee regarding the suitability of its products for any particular purpose, nor does **onsemi** assume any liability arising out of the application or use of any product or circuit, and specifically disclaims any and all liability, including without limitation special, consequential or incidental damages. **onsemi** does not convey any license under its patent rights nor the rights of others.

onsemi, onsemi, and other names, marks, and brands are registered and/or common law trademarks of Semiconductor Components Industries, LLC dba "**onsemi**" or its affiliates and/or subsidiaries in the United States and/or other countries. **onsemi** owns the rights to a number of patents, trademarks, copyrights, trade secrets, and other intellectual property. A listing of **onsemi**'s product/patent coverage may be accessed at www.onsemi.com/site/pdf/Patent−Marking.pdf. **onsemi** reserves the right to make changes at any time to any products or information herein, without notice. The information herein is provided "as−is" and **onsemi** makes no warranty, representation or guarantee regarding the accuracy of the information, product features, availability, functionality, or suitability of its products for any particular purpose, nor does **onsemi** assume any liability arising out of the application or use of any product or circuit, and specifically disclaims any and all liability, including without limitation special, consequential or incidental damages. Buyer is responsible for its products and applications using **onsemi** products, including compliance with all laws, regulations and safety requirements or standards, regardless of any support or applications information provided by **onsemi**. "Typical" parameters which may be provided in **onsemi** data sheets and/or specifications can and do vary in different applications and actual performance may vary over time. All operating parameters, including "Typicals" must be validated for each customer application by customer's technical experts. **onsemi** does not convey any license under any of its intellectual property rights nor the rights of others. **onsemi** products are not designed, intended, or authorized for use as a critical component in life support systems or any FDA Class 3 medical devices or medical devices with a same or similar classification in a foreign jurisdiction or any devices intended for implantation in the human body. Should Buyer purchase or use **onsemi** products for any such unintended or unauthorized application, Buyer shall indemnify and hold **onsemi** and its officers, employees, subsidiaries, affiliates, and distributors harmless against all claims, costs, damages, and expenses, and reasonable attorney fees arising out of, directly or indirectly, any claim of personal injury or death associated with such unintended or unauthorized use, even if such claim alleges that **onsemi** was negligent regarding the design or manufacture of the part. **onsemi** is an Equal Opportunity/Affirmative Action Employer. This literature is subject to all applicable copyright laws and is not for resale in any manner.

ADDITIONAL INFORMATION

TECHNICAL PUBLICATIONS:
Technical Library: www.onsemi.com/design/resources/technical−documentation
onsemi Website: www.onsemi.com

ONLINE SUPPORT: www.onsemi.com/support
For additional information, please contact your local Sales Representative at
www.onsemi.com/support/sales