TPS255x Precision Adjustable Current-Limited Power-Distribution Switches

1 Features

- Meets USB Current-Limiting Requirements
- Adjustable Current Limit, 500 mA to 5 A (Typical)
- ±6.5% Current-Limit Accuracy at 4.5 A
- Fast Overcurrent Response: 3.5-µs (Typical)
- 22-mΩ High-Side MOSFET
- Operating Voltage: 2.5 V to 6.5 V
- 2-µA Maximum Standby Supply Current
- Built-in Soft Start
- 15-kV and 8-kV System-Level ESD Capable
- UL Listed: File No. E169910 and CB IEC60950-1-am2 ed2.0

2 Applications

- USB Ports and Hubs
- Digital TVs
- Set-Top Boxes
- VOIP Phones

3 Description

The TPS255x power-distribution switch is intended for applications where precision current limiting is required or heavy capacitive loads and short circuits are encountered. These devices offer a programmable current-limit threshold between 500 mA and 5 A (typical) through an external resistor. The power-switch rise and fall times are controlled to minimize current surges during turnon and turnoff.

TPS255x devices limit the output current to a safe level by switching into a constant-current mode when the output load exceeds the current-limit threshold. The $\overline{\text{FAULT}}$ logic output asserts low during overcurrent and overtemperature conditions.

Device Information(1)

PART NUMBER	PACKAGE	BODY SIZE (NOM)
TPS2556, TPS2557	VSON (8)	3.00 mm × 3.00 mm

(1) For all available packages, see the orderable addendum at the end of the data sheet.

Typical Application as USB Power Switch

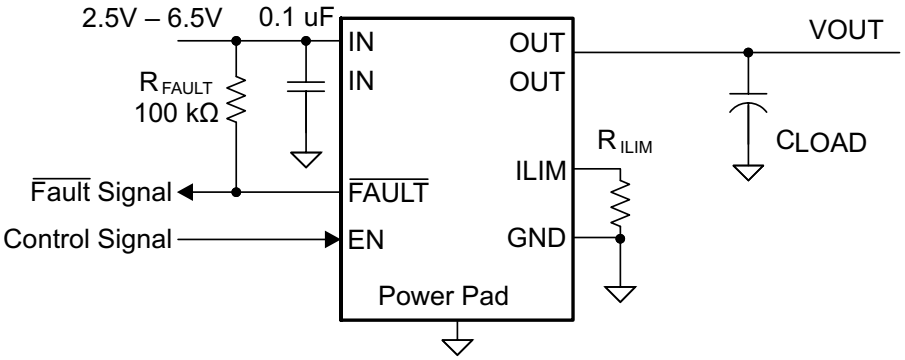

Copyright © 2016, Texas Instruments Incorporated

An IMPORTANT NOTICE at the end of this data sheet addresses availability, warranty, changes, use in safety-critical applications, intellectual property matters and other important disclaimers. PRODUCTION DATA.

Table of Contents

1 Features ... 1
2 Applications ... 1
3 Description ... 1
4 Revision History ... 2
5 Device Comparison Table ... 3
6 Pin Configuration and Functions ... 3
7 Specifications ... 4
7.1 Absolute Maximum Ratings ... 4
7.2 ESD Ratings ... 4
7.3 Recommended Operating Conditions ... 4
7.4 Thermal Information ... 5
7.5 Electrical Characteristics ... 5
7.6 Switching Characteristics ... 6
7.7 Typical Characteristics ... 7
8 Parameter Measurement Information ... 10
9 Detailed Description ... 11
9.1 Overview ... 11
9.2 Functional Block Diagram ... 11
9.3 Feature Description ... 11
9.4 Device Functional Modes ... 12
10 Application and Implementation ... 13
10.1 Application Information ... 13
10.2 Typical Applications ... 13
11 Power Supply Recommendations ... 18
12 Layout ... 19
12.1 Layout Guidelines ... 19
12.2 Layout Example ... 19
12.3 Thermal Considerations ... 20
13 Device and Documentation Support ... 21
13.1 Related Links ... 21
13.2 Receiving Notification of Documentation Updates 21
13.3 Community Resources ... 21
13.4 Trademarks ... 21
13.5 Electrostatic Discharge Caution ... 21
13.6 Glossary ... 21
14 Mechanical, Packaging, and Orderable Information ... 21

4 Revision History

NOTE: Page numbers for previous revisions may differ from page numbers in the current version.

Changes from Revision A (Feburary 2012) to Revision B	Page
• Added *Device Information* table, *Device Comparison Table*, *Pin Configuration and Functions* section, *Specifications* section, *ESD Ratings* table, *Application and Implementation* section, *Power Supply Recommendations* section, *Layout* section, *Device and Documentation Support* section, and *Mechanical, Packaging, and Orderable Information* section	1
• Deleted *Ordering Information* table; see Package Option Addendum at the end of the data sheet	1
• Added *Thermal Information* table	5
• Changed $R_{\theta JC(top)}$ value in *Thermal Information* table From: 10.7°C/W To: 54.5°C/W	5
• Changed Figure 11 title From: Current Limit Threshold Vs R_{ILM} To: Switch Current vs Drain-Source Voltage Across Switch	7
• Changed Figure 12 title From: Current Limit Threshold Vs R_{ILM} To: Switch Current vs Drain-Source Voltage Across Switch	7

Changes from Original (November 2009) to Revision A	Page
• Changed V_{EN} to $V_{\overline{EN}}$ in *Recommended Operating Conditions* table	4
• Changed $V_{\overline{EN}}$ to V_{EN} in *Recommended Operating Conditions* table	4

Copyright © 2009–2016, Texas Instruments Incorporated

5 Device Comparison Table

33 mΩ, SINGLE	80 mΩ, SINGLE	80 mΩ, DUAL	80 mΩ, DUAL	80 mΩ, TRIPLE	80 mΩ, QUAD	80 mΩ, QUAD
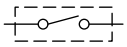	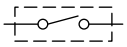	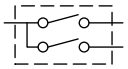	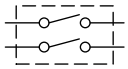	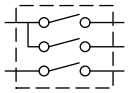	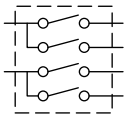	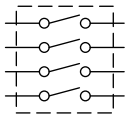
TPS201xA 0.2 A–2 A	TPS2014 600 mA					
TPS202x 0.2 A–2 A	TPS2015 1 A	TPS2042B 500 mA	TPS2080 500 mA			
TPS203x 0.2 A–2 A	TPS2041B 500 mA	TPS2052B 500 mA	TPS2081 500 mA	TPS2043B 500 mA		
	TPS2051B 500 mA	TPS2046B 250 mA	TPS2082 500 mA	TPS2053B 500 mA	TPS2044B 500 mA	TPS2085 500 mA
	TPS2045A 250 mA	TPS2056 250 mA	TPS2090 250 mA	TPS2047B 250 mA	TPS2054B 500 mA	TPS2086 500 mA
	TPS2049 100 mA	TPS2062 1 A	TPS2091 250 mA	TPS2057A 250 mA	TPS2048A 250 mA	TPS2087 500 mA
	TPS2055A 250 mA	TPS2066 1 A	TPS2092 250 mA	TPS2063 1 A	TPS2058 250 mA	TPS2095 250 mA
	TPS2061 1 A	TPS2060 1.5 A		TPS2067 1 A		TPS2096 250 mA
	TPS2065 1 A	TPS2064 1.5 A				TPS2097 250 mA
	TPS2068 1.5 A					
	TPS2069 1.5 A					

6 Pin Configuration and Functions

DRB Package
8-Pin VSON
Top View

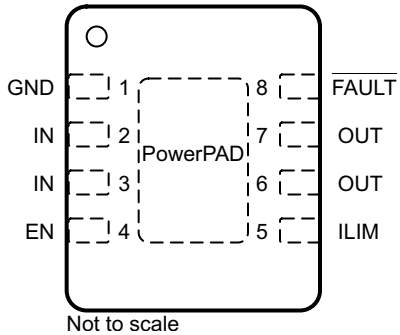

Not to scale

TPS2556: $\overline{EN}$ pin is active low.
TPS2557: EN pin is active high.

Pin Functions

PIN			I/O	DESCRIPTION
NAME	TPS2556	TPS2557		
$\overline{EN}$	4	—	I	Enable input: Logic low turns on power switch. Applicable to the TPS2556.
EN	—	4	I	Enable input: Logic high turns on power switch. Applicable to the TPS2557.
$\overline{FAULT}$	8	8	O	Active-low open-drain output: Asserted during overcurrent or overtemperature conditions.
GND	1	1	—	Ground connection: Connect externally to PowerPAD.
ILIM	5	5	O	External resistor used to set current-limit threshold. TI recommends 20 kΩ ≤ R_{ILIM} ≤ 187 kΩ.
IN	2, 3	2, 3	I	Input voltage: Connect a 0.1-µF or greater ceramic capacitor from IN to GND as close to the IC as possible.
OUT	6, 7	6, 7	O	Power-switch output.
PowerPAD™	PowerPAD	PowerPAD	—	Internally connected to GND. Used to heat-sink the part to the circuit board traces. Connect PowerPAD to GND pin externally.

Copyright © 2009–2016, Texas Instruments Incorporated

7 Specifications

7.1 Absolute Maximum Ratings

over operating free-air temperature range (unless otherwise noted)[1][2]

		MIN	MAX	UNIT
Voltage	IN, OUT, EN or $\overline{EN}$, ILIM, and $\overline{FAULT}$ pins	–0.3	7	V
Voltage from IN to OUT		–7	7	V
Continuous output current		Internally limited		
Continuous $\overline{FAULT}$ sink current			25	mA
ILIM source current		Internally limited		
Continuous total power dissipation		See *Thermal Information*		
Maximum junction temperature		–40	OTSD2	°C
Storage temperature, T_{stg}		-65	150	°C

(1) Stresses beyond those listed under *Absolute Maximum Ratings* may cause permanent damage to the device. These are stress ratings only, which do not imply functional operation of the device at these or any other conditions beyond those indicated under *Recommended Operating Conditions*. Exposure to absolute-maximum-rated conditions for extended periods may affect device reliability.
(2) Voltages are referenced to GND unless otherwise noted.

7.2 ESD Ratings

			VALUE	UNIT
$V_{(ESD)}$	Electrostatic discharge	Human-body model (HBM), per ANSI/ESDA/JEDEC JS-001[1]	±2000	V
		Charged-device model (CDM), per JEDEC specification JESD22-C101[2]	±500	
		IEC 61000-4-2 contact discharge[3]	±8000	
		IEC 61000-4-2 air discharge[3]	±15000	

(1) JEDEC document JEP155 states that 500-V HBM allows safe manufacturing with a standard ESD control process.
(2) JEDEC document JEP157 states that 250-V CDM allows safe manufacturing with a standard ESD control process.
(3) Surges per EN61000-4-2, 1999 applied between USB and output ground of the TPS2556EVM (HPA423) evaluation module (see *Using the TPS2556EVM-423 and TPS2557EVM-423*). These were the test levels, not the failure threshold.

7.3 Recommended Operating Conditions

			MIN	MAX	UNIT
V_{IN}	Input voltage, IN		2.5	6.5	V
$V_{\overline{EN}}$	Enable voltage	TPS2556	0	6.5	V
V_{EN}		TPS2557	0	6.5	
V_{IH}	High-level input voltage on Enable pin		1.1		V
V_{IL}	Low-level input voltage on Enable pin			0.66	
I_{OUT}	Continuous output current (OUT pin)		0	5	A
	Continuous $\overline{FAULT}$ sink current		0	10	mA
R_{ILIM}	Recommended resistor limit		20	187	kΩ
T_J	Operating virtual junction temperature		–40	125	°C

Copyright © 2009–2016, Texas Instruments Incorporated

7.4 Thermal Information

THERMAL METRIC[1]		TPS255x DRB (VSON) 8 PINS	UNIT
$R_{\theta JA}$	Junction-to-ambient thermal resistance	41.5	°C/W
$R_{\theta JC(top)}$	Junction-to-case (top) thermal resistance	54.5	°C/W
$R_{\theta JB}$	Junction-to-board thermal resistance	16.4	°C/W
ψ_{JT}	Junction-to-top characterization parameter	0.7	°C/W
ψ_{JB}	Junction-to-board characterization parameter	16.6	°C/W
$R_{\theta JC(bot)}$	Junction-to-case (bottom) thermal resistance	3.6	°C/W

(1) For more information about traditional and new thermal metrics, see the *Semiconductor and IC Package Thermal Metrics* application report.

7.5 Electrical Characteristics

over recommended operating conditions, $V_{\overline{EN}}$ = 0 V or V_{EN} = V_{IN} (unless otherwise noted)[1]

PARAMETER		TEST CONDITIONS		MIN	TYP	MAX	UNIT
POWER SWITCH							
$r_{DS(ON)}$	Static drain-source on-state resistance	T_J = 25°C			22	25	mΩ
		–40°C ≤T_J ≤ 125°C				35	
	Enable pin turn on and off threshold			0.66		1.1	V
	Enable input hysteresis[2]				55		mV
I_{EN}	Input current	V_{EN} = 0 V or 6.5 V, $V_{\overline{EN}}$ = 0 V or 6.5 V		–0.5		0.5	µA
I_{OS}	Current-limit threshold (Maximum DC output current I_{OUT} delivered to load) and short-circuit current, OUT connected to GND	R_{ILIM} = 24.9 kΩ		4130	4450	4695	mA
		R_{ILIM} = 61.9 kΩ		1590	1785	1960	
		R_{ILIM} = 100 kΩ		935	1100	1260	
I_{IN_OFF}	Supply current, low-level output	V_{IN} = 6.5 V, No load on OUT, $V_{\overline{EN}}$ = 6.5 V or V_{EN} = 0 V			0.1	2	µA
I_{IN_ON}	Supply current, high-level output	V_{IN} = 6.5 V, No load on OUT	R_{ILIM} = 24.9 kΩ		95	120	µA
			R_{ILIM} = 100 kΩ		85	110	µA
I_{REV}	Reverse leakage current	V_{OUT} = 6.5 V, V_{IN} = 0 V, T_J = 25 °C			0.01	1	µA
UVLO	Low-level input voltage (IN pin)	V_{IN} rising			2.35	2.45	V
	UVLO hysteresis (IN pin)[2]				35		mV
$\overline{FAULT}$ FLAG							
V_{OL}	Output low voltage ($\overline{FAULT}$ pin)	$I_{\overline{FAULT}}$ = 1 mA				180	mV
	Off-state leakage	$V_{\overline{FAULT}}$ = 6.5 V				1	µA
	$\overline{FAULT}$ deglitch	$\overline{FAULT}$ assertion or deassertion due to overcurrent condition		6	9	13	ms
THERMAL SHUTDOWN							
OTSD2	Thermal shutdown threshold			155			°C
OTSD	Thermal shutdown threshold in current-limit			135			°C
	Hysteresis[2]				20		°C

(1) Pulse-testing techniques maintain junction temperature close to ambient temperature; thermal effects must be considered separately.
(2) These parameters are provided for reference only, and do no constitute part of TI's published specifications for purposes of TI's product warranty.

7.6 Switching Characteristics

over operating free-air temperature range (unless otherwise noted)

PARAMETER		TEST CONDITIONS		MIN	TYP	MAX	UNIT
t_R	Rise time, output	C_L = 1 µF, R_L= 100 Ω, (see Figure 15)	V_{IN} = 6.5 V	2	3	4	ms
			V_{IN} = 2.5 V	1	2	3	
t_F	Fall time, output	C_L = 1 µF, R_L= 100 Ω, (see Figure 15)	V_{IN} = 6.5 V	0.6	0.8	1	ms
			V_{IN} = 2.5 V	0.4	0.6	0.8	
t_{ON}	Turnon time	C_L = 1 µF, R_L= 100 Ω, (see Figure 15)				9	ms
t_{OFF}	Turnoff time	C_L = 1 µF, R_L= 100 Ω, (see Figure 15)				6	ms
t_{IOS}	Response time to short circuit(1)	V_{IN} = 5 V (see Figure 16)			3.5		µs

(1) These parameters are provided for reference only, and do no constitute part of TI's published specifications for purposes of TI's product warranty.

Copyright © 2009–2016, Texas Instruments Incorporated

7.7 Typical Characteristics

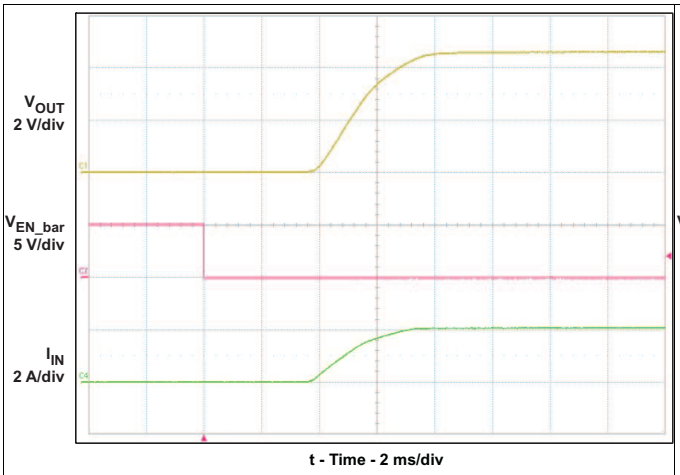

Figure 1. Turnon Delay and Rise Time

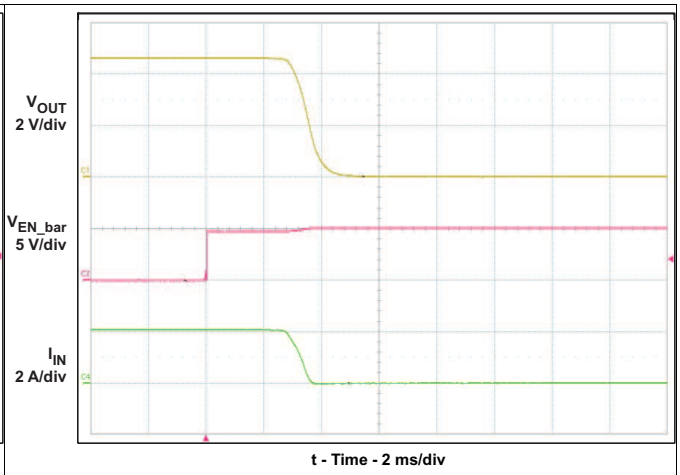

Figure 2. Turnoff Delay and Fall Time

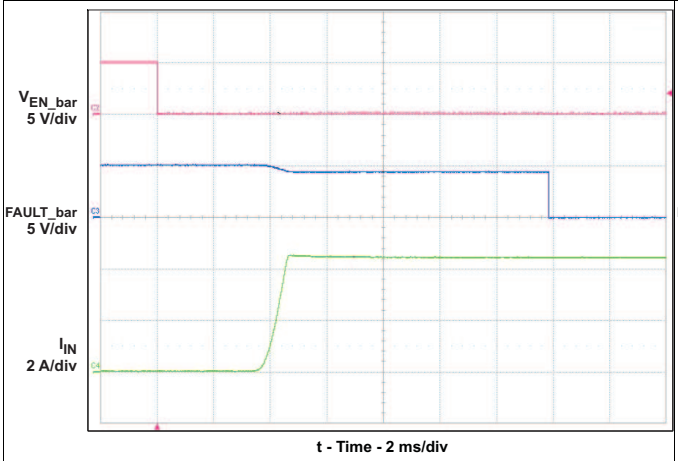

Figure 3. Device Enabled into Short-Circuit

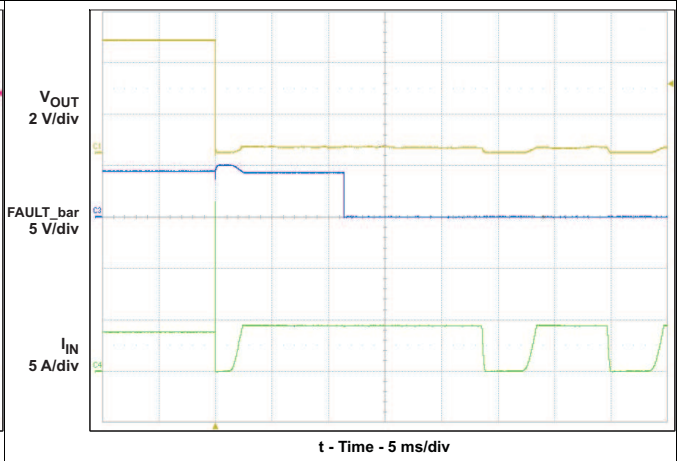

Figure 4. Full-Load to Short-Circuit Transient Response

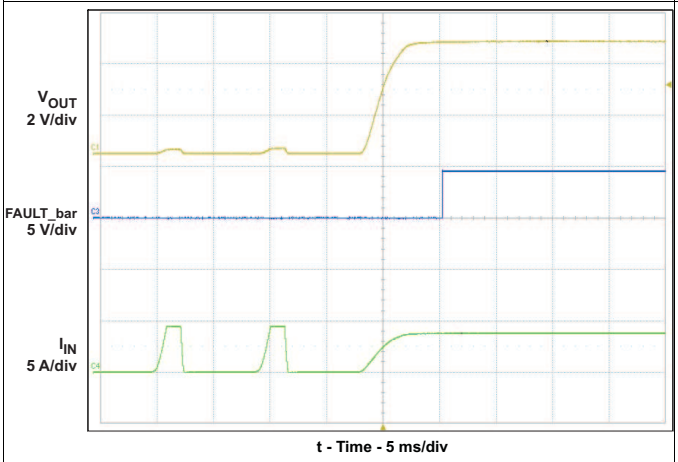

Figure 5. Short-Circuit to Full-Load Recovery Response

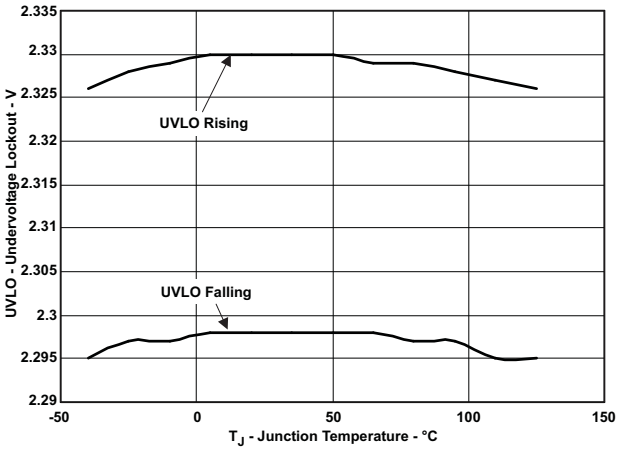

Figure 6. Undervoltage Lockout

Typical Characteristics (continued)

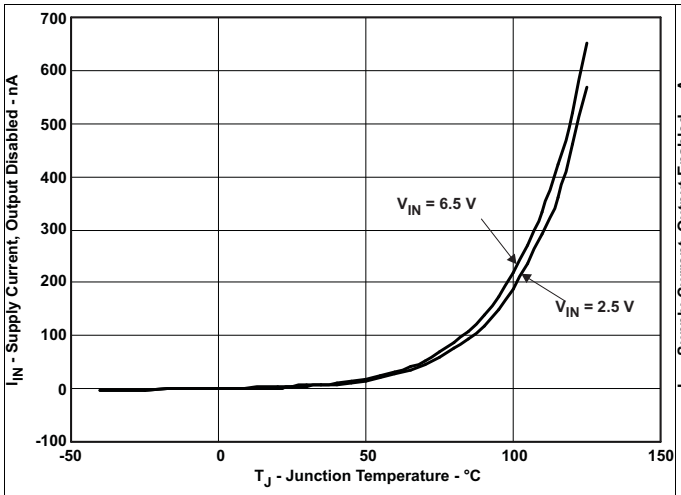

Figure 7. Supply Current, Output Disabled

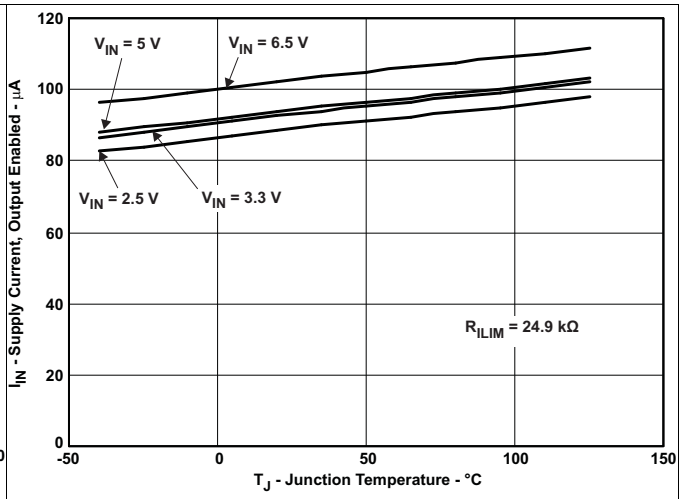

Figure 8. Supply Current, Output Enabled

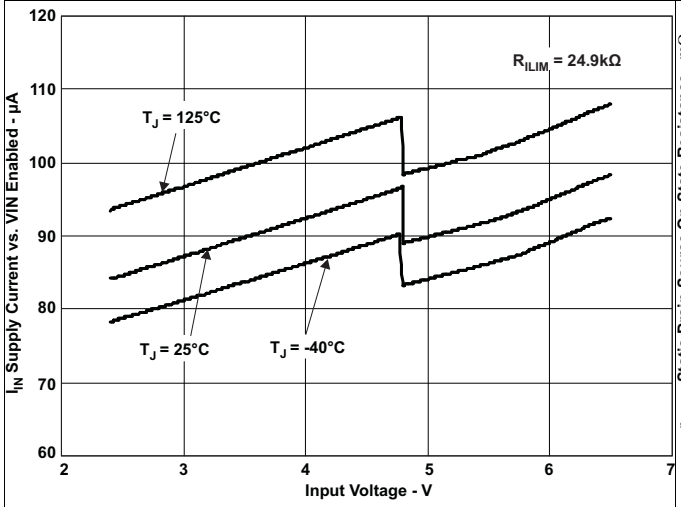

Figure 9. Supply Current, Output Enabled

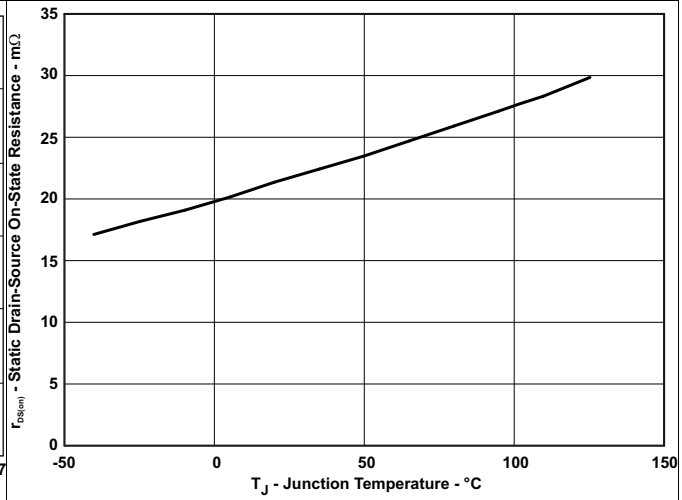

Figure 10. MOSFET $r_{DS(ON)}$ vs Junction Temperature

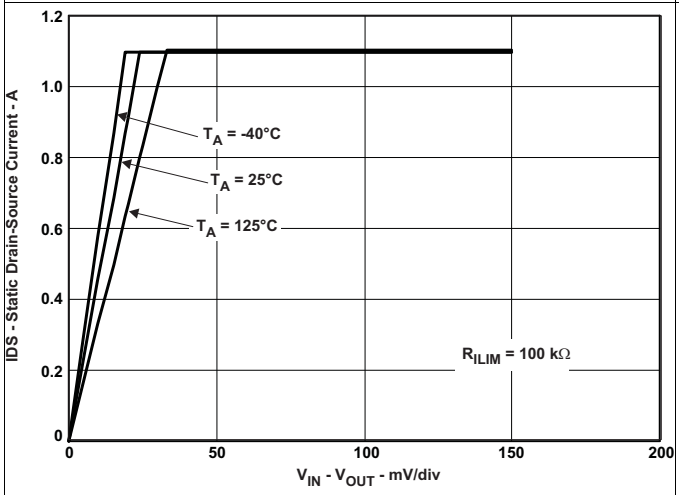

Figure 11. Switch Current vs Drain-Source Voltage Across Switch

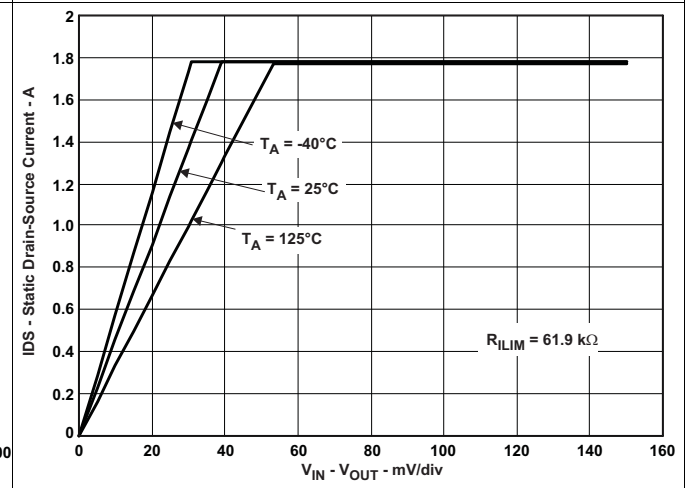

Figure 12. Switch Current vs Drain-Source Voltage Across Switch

Copyright © 2009–2016, Texas Instruments Incorporated

Typical Characteristics (continued)

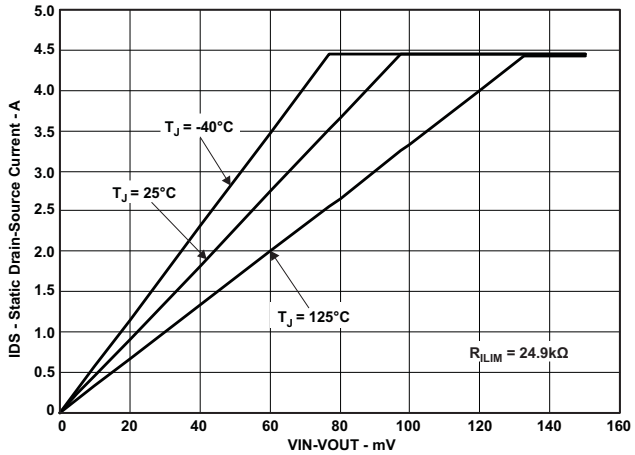

Figure 13. Switch Current vs Drain-Source Voltage Across Switch

8 Parameter Measurement Information

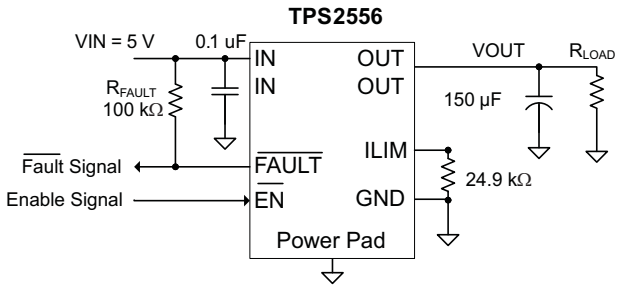

Figure 14. Typical Characteristics Reference Schematic

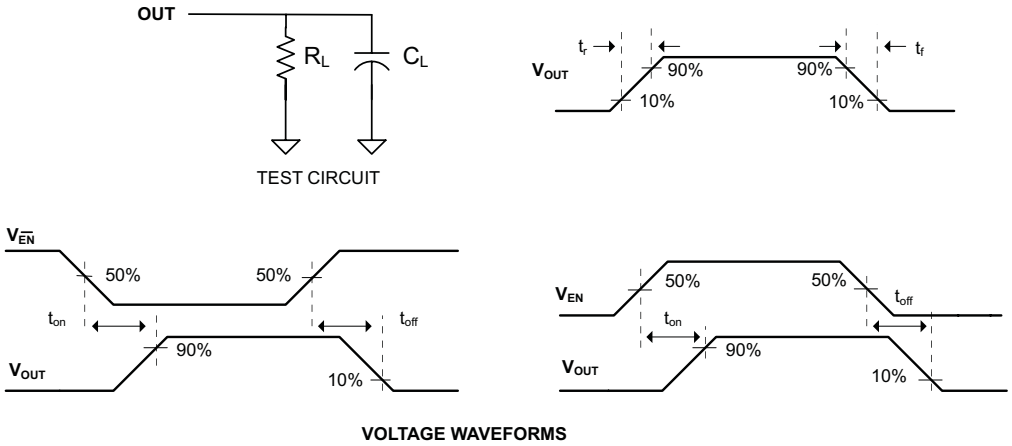

Figure 15. Test Circuit and Voltage Waveforms

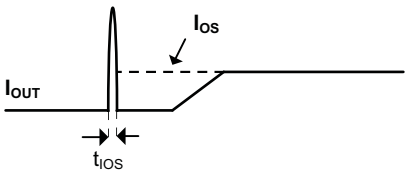

Figure 16. Response Time to Short Circuit Waveform

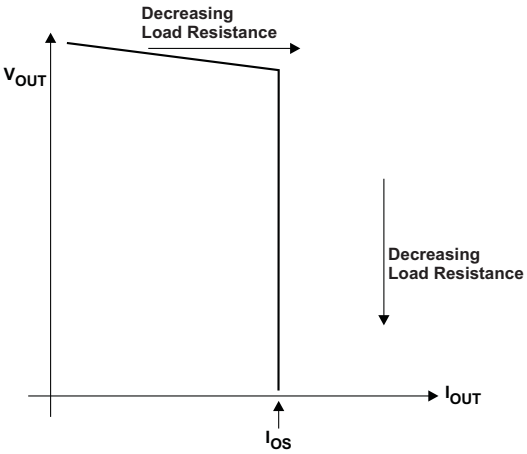

Figure 17. Output Voltage vs Current-Limit Threshold

Copyright © 2009–2016, Texas Instruments Incorporated

9 Detailed Description

9.1 Overview

The TPS2556 and TPS2557 are current-limited, power-distribution switches using N-channel MOSFETs for applications where short circuits or heavy capacitive loads are encountered. These devices allow the user to program the current-limit threshold from 500 mA to 5 A (typical) through an external resistor. These devices incorporate an internal charge pump and the gate drive circuitry necessary to drive the N-channel MOSFET. The charge pump supplies power to the driver circuit and provides the necessary voltage to pull the gate of the MOSFET above the source. The charge pump operates from input voltages as low as 2.5 V and requires little supply current. The driver controls the gate voltage of the power switch. The driver incorporates circuitry that controls the rise and fall times of the output voltage to limit large current and voltage surges and provides built-in soft-start functionality. The TPS255x family limits the output current to the programmed current-limit threshold (I_{OS}) during an overcurrent or short-circuit event by reducing the charge pump voltage driving the N-channel MOSFET and operating it in the linear range of operation. The result of limiting the output current to I_{OS} reduces the output voltage at OUT because N-channel MOSFET is no longer fully enhanced.

9.2 Functional Block Diagram

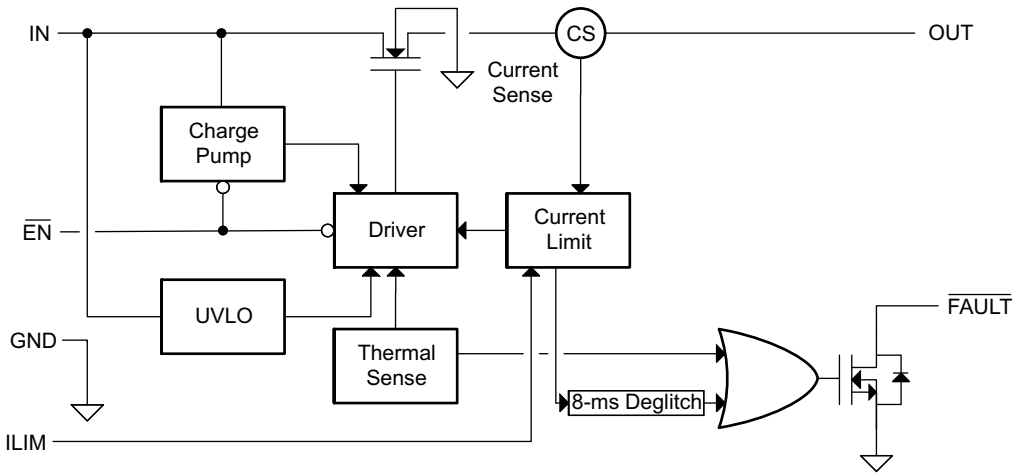

Copyright © 2016, Texas Instruments Incorporated

9.3 Feature Description

9.3.1 Overcurrent Conditions

The TPS255x responds to overcurrent conditions by limiting their output current to I_{OS}. When an overcurrent condition is detected, the device maintains a constant output current and the output voltage reduces accordingly. Two possible overload conditions can occur.

The first condition is when a short circuit or partial short circuit is present when the device is powered up or enabled. The output voltage is held near zero potential with respect to ground and the TPS255x ramps the output current to I_{OS}. The TPS255x limits the current to I_{OS} until the overload condition is removed or the device begins to thermal cycle.

The second condition is when a short circuit, partial short circuit, or transient overload occurs while the device is enabled and powered on. The device responds to the overcurrent condition within time t_{IOS} (see Figure 16). The current-sense amplifier is overdriven during this time and momentarily disables the internal N-channel MOSFET. The current-sense amplifier recovers and ramps the output current to I_{OS}. Similar to the previous case, the TPS255x limits the current to I_{OS} until the overload condition is removed or the device begins to thermal cycle.

The TPS255s thermal cycles if an overload condition is present long enough to activate thermal limiting in any of the above cases. The device turns off when the junction temperature exceeds 135°C (minimum) while in current limit. The device remains off until the junction temperature cools 20°C (typical) and then restarts. The TPS255x cycles on and off until the overload is removed (see Figure 5) .

Feature Description (continued)

9.3.2 $\overline{\text{FAULT}}$ Response

The $\overline{\text{FAULT}}$ open-drain output is asserted (active low) during an overcurrent or overtemperature condition. The TPS255s asserts the $\overline{\text{FAULT}}$ signal until the fault condition is removed and the device resumes normal operation. The TPS255s is designed to eliminate false $\overline{\text{FAULT}}$ reporting by using an internal delay *deglitch* circuit for overcurrent (9-ms typical) conditions without the need for external circuitry. This ensures that $\overline{\text{FAULT}}$ is not accidentally asserted due to normal operation such as starting into a heavy capacitive load. The deglitch circuitry delays entering and leaving current-limit induced fault conditions. The $\overline{\text{FAULT}}$signal is not deglitched when the MOSFET is disabled due to an overtemperature condition but is deglitched after the device has cooled and begins to turn on. This unidirectional deglitch prevents $\overline{\text{FAULT}}$ oscillation during an overtemperature event.

9.3.3 Undervoltage Lockout (UVLO)

The undervoltage lockout (UVLO) circuit disables the power switch until the input voltage reaches the UVLO turnon threshold. Built-in hysteresis prevents unwanted on and off cycling due to input voltage droop during turnon.

9.3.4 Enable ($\overline{\text{EN}}$ OR EN)

The logic enable controls the power switch and device supply current. The supply current is reduced to less than 2-µA when a logic high is present on $\overline{\text{EN}}$ or when a logic low is present on EN. A logic low input on $\overline{\text{EN}}$ or a logic high input on EN enables the driver, control circuits, and power switch. The enable input is compatible with both TTL and CMOS logic levels.

9.3.5 Thermal Sense

The TPS255x self-protects by using two independent thermal sensing circuits that monitor the operating temperature of the power switch and disable operation if the temperature exceeds recommended operating conditions. The TPS255x operates in constant-current mode during an overcurrent conditions, which increases the voltage drop across power switch. The power dissipation in the package is proportional to the voltage drop across the power switch, which increases the junction temperature during an overcurrent condition. The first thermal sensor (OTSD) turns off the power switch when the die temperature exceeds 135°C (minimum) and the part is in current limit. Hysteresis is built into the thermal sensor, and the switch turns on after the device has cooled approximately 20°C.

The TPS255x also has a second ambient thermal sensor (OTSD2). The ambient thermal sensor turns off the power switch when the die temperature exceeds 155°C (minimum) regardless of whether the power switch is in current limit and turns on the power switch after the device has cooled approximately 20°C. The TPS255x continues to cycle off and on until the fault is removed.

9.4 Device Functional Modes

There are no other functional modes.

Copyright © 2009–2016, Texas Instruments Incorporated

10 Application and Implementation

NOTE

Information in the following applications sections is not part of the TI component specification, and TI does not warrant its accuracy or completeness. TI's customers are responsible for determining suitability of components for their purposes. Customers should validate and test their design implementation to confirm system functionality.

10.1 Application Information

The TPS2556 and TPS2557 are precision power-distribution switches for applications where heavy capacitive loads and short circuits are expected to be encountered. The following design procedures can be used to choose the input and output capacitors as well as to calculate the current limit programming resistor value for a typical design. Additional application examples are provided including an auto-retry circuit and a two-level current limit circuit.

10.2 Typical Applications

10.2.1 Current-Limiting Power-Distribution Switch

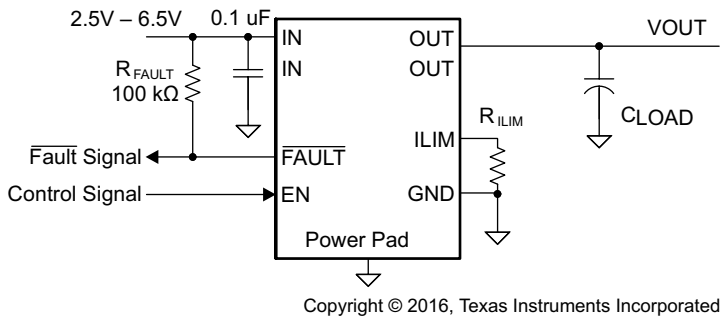

Figure 18. Typical Current-Limiting Application

10.2.1.1 Design Requirements

For this example, use the parameters listed in Table 1 as the input parameters.

Table 1. Design Parameters

PARAMETER	VALUE
Input voltage	5 V
Output voltage	5 V
Above a minimum current limit	3000 mA
Below a maximum current limit	5000 mA

10.2.1.2 Detailed Design Procedure

10.2.1.2.1 Input and Output Capacitance

Input and output capacitance improves the performance of the device; the actual capacitance must be optimized for the particular application. TI recommends a 0.1-µF or greater ceramic bypass capacitor between IN and GND as close to the device as possible for local noise decoupling for all applications. This precaution reduces ringing on the input due to power-supply transients. Additional input capacitance may be needed on the input to reduce voltage overshoot from exceeding the absolute-maximum voltage of the device during heavy transient conditions. This is especially important during bench testing when long, inductive cables are used to connect the evaluation board to the bench power supply.

Output capacitance is not required, but TI recommends placing a high-value electrolytic capacitor on the output pin when large transient currents are expected on the output.

10.2.1.2.2 Programming the Current-Limit Threshold

The overcurrent threshold is user programmable through an external resistor. The TPS255x uses an internal regulation loop to provide a regulated voltage on the ILIM pin. The current-limit threshold is proportional to the current sourced out of ILIM. The recommended 1% resistor for R_{ILIM} is 20 kΩ ≤ R_{ILIM} ≤ 187 kΩ to ensure stability of the internal regulation loop. Many applications require that the minimum current limit is above a certain current level or that the maximum current limit is below a certain current level, so it is important to consider the tolerance of the overcurrent threshold when selecting a value for R_{ILIM}. Equation 1 approximates the resulting overcurrent threshold for a given external resistor value (R_{ILIM}). See *Electrical Characteristics* for specific current limit settings. The traces routing the R_{ILIM} resistor to the TPS255x must be as short as possible to reduce parasitic effects on the current-limit accuracy.

$$I_{OSmax}(mA) = \frac{99038V}{R_{ILIM}^{0.947} k\Omega}$$
$$I_{OSnom}(mA) = \frac{111704V}{R_{ILIM}^{1.0028} k\Omega}$$
$$I_{OSmin}(mA) = \frac{127981V}{R_{ILIM}^{1.0708} k\Omega} \quad (1)$$

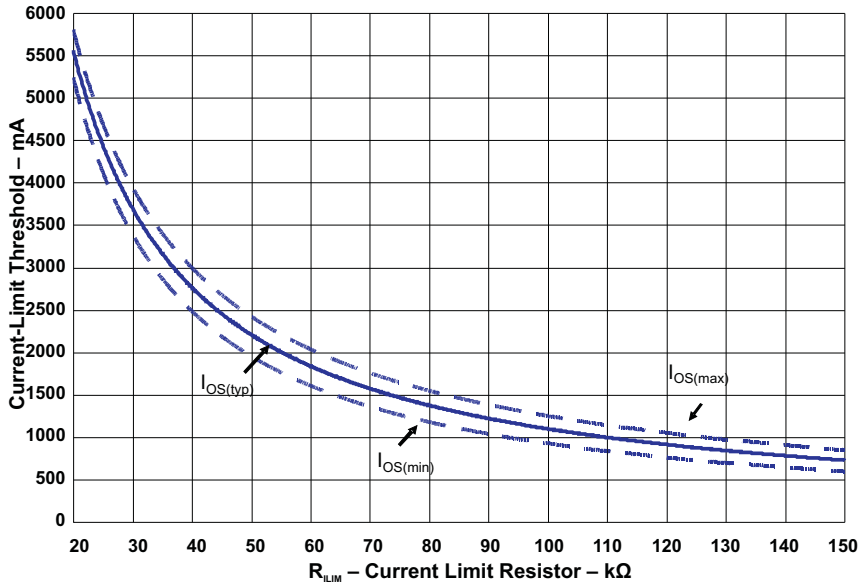

Figure 19. Current-Limit Threshold vs R_{ILIM}

Copyright © 2009–2016, Texas Instruments Incorporated

10.2.1.2.2.1 Designing Above a Minimum Current Limit

Some applications require that current limiting cannot occur below a certain threshold. For this example, assume that 3 A must be delivered to the load so that the minimum desired current-limit threshold is 3000 mA. Use the I_{OS} equations and Figure 19 to select R_{ILIM}.

$$I_{OSmin}(mA) = 3000mA$$
$$I_{OSmin}(mA) = \frac{127981V}{R_{ILIM}^{1.0708}k\Omega}$$
$$R_{ILIM}(k\Omega) = \left(\frac{127981V}{I_{OSmin}mA}\right)^{\frac{1}{1.0708}}$$
$$R_{ILIM}(k\Omega) = 33.3k\Omega \quad (2)$$

Select the closest 1% resistor less than the calculated value: R_{ILIM} = 33.2 kΩ. This sets the minimum current-limit threshold at 3000 mA . Use the I_{OS} equations, Figure 19, and the previously calculated value for R_{ILIM} to calculate the maximum resulting current-limit threshold.

$$R_{ILIM}(k\Omega) = 33.2k\Omega$$
$$I_{OSmax}(mA) = \frac{99038V}{R_{ILIM}^{0.947}k\Omega}$$
$$I_{OSmax}(mA) = \frac{99038V}{33.2^{0.947}k\Omega}$$
$$I_{OSmax}(mA) = 3592mA \quad (3)$$

The resulting maximum current-limit threshold is 3592 mA with a 33.2-kΩ resistor.

10.2.1.2.2.2 Designing Below a Maximum Current Limit

Some applications require that current limiting must occur below a certain threshold. For this example, assume that the desired upper current-limit threshold must be below 5000 mA to protect an upstream power supply. Use the I_{OS} equations and Figure 19 to select R_{ILIM}.

$$I_{OSmax}(mA) = 5000mA$$
$$I_{OSmax}(mA) = \frac{99038V}{R_{ILIM}^{0.947}k\Omega}$$
$$R_{ILIM}(k\Omega) = \left(\frac{99038V}{I_{OSmax}mA}\right)^{\frac{1}{0.947}}$$
$$R_{ILIM}(k\Omega) = 23.4k\Omega \quad (4)$$

Select the closest 1% resistor greater than the calculated value: R_{ILIM} = 23.7 kΩ. This sets the maximum current-limit threshold at 5000 mA . Use the I_{OS} equations, Figure 19, and the previously calculated value for R_{ILIM} to calculate the minimum resulting current-limit threshold.

$$R_{ILIM}(k\Omega) = 23.7k\Omega$$
$$I_{OSmin}(mA) = \frac{127981V}{R_{ILIM}^{1.0708}k\Omega}$$
$$I_{OSmin}(mA) = \frac{127981V}{23.7^{1.0708}k\Omega}$$
$$I_{OSmin}(mA) = 4316mA \quad (5)$$

The resulting minimum current-limit threshold is 4316 mA with a 23.7-kΩ resistor.

10.2.1.2.2.3 Accounting for Resistor Tolerance

The analysis of resistor selection focused only on the TPS255x performance and assumed an exact resistor value. However, resistors sold in quantity are not exact and are bounded by an upper and lower tolerance centered around a nominal resistance. The additional R_{ILIM} resistance tolerance directly affects the current-limit threshold accuracy at a system level. Table 2 shows a process that accounts for worst-case resistor tolerance assuming 1% resistor values. Using the selection process outlined, determine the upper and lower resistance bounds of the selected resistor. Then calculate the upper and lower resistor bounds to determine the threshold limits. It is important to use tighter tolerance resistors (0.5% or 0.1%) when precision current limiting is desired.

Table 2. Common R_{ILIM} Resistor Selections

DESIRED NOMINAL CURRENT LIMIT (mA)	IDEAL RESISTOR (kΩ)	CLOSEST 1% RESISTOR (kΩ)	RESISTOR BOUNDS (kΩ)		I_{OS} ACTUAL LIMITS (mA)		
			1% LOW	1% HIGH	MIN	NOM	MAX
750	146.9	147	145.5	148.5	605	749	886
1000	110.2	110	108.9	111.1	825	1002	1166
1250	88.2	88.7	87.8	89.6	1039	1244	1430
1500	73.6	73.2	72.5	73.9	1276	1508	1715
1750	63.1	63.4	62.8	64	1489	1742	1965
2000	55.2	54.9	54.4	55.4	1737	2012	2252
2250	49.1	48.7	48.2	49.2	1975	2269	2523
2500	44.2	44.2	43.8	44.6	2191	2501	2765
2750	40.2	40.2	39.8	40.6	2425	2750	3025
3000	36.9	36.5	36.1	36.9	2689	3030	3315
3250	34	34	33.7	34.3	2901	3253	3545
3500	31.6	31.6	31.3	31.9	3138	3501	3800
3750	29.5	29.4	29.1	29.7	3390	3764	4068
4000	27.7	27.4	27.1	27.7	3656	4039	4349
4250	26	26.1	25.8	26.4	3851	4241	4554
4500	24.6	24.9	24.7	25.1	4050	4446	4761
4750	23.3	23.2	23	23.4	4369	4773	5091
5000	22.1	22.1	21.9	22.3	4602	5011	5331
5250	21.1	21	20.8	21.2	4861	5274	5595
5500	20.1	20	19.8	20.2	5121	5539	5859

10.2.1.2.3 Auto-Retry Functionality

Some applications require that an overcurrent condition disables the part momentarily during a fault condition and re-enables after a pre-set time. This *auto-retry* functionality can be implemented with an external resistor and capacitor. During a fault condition, $\overline{FAULT}$pulls EN low. The part is disabled when EN is pulled below the turn-off theshold, and $\overline{FAULT}$ goes high impedance allowing C_{RETRY} to begin charging. The part re-enables when the voltage on EN reaches the turn-on threshold. The auto-retry time is determined by the resistor and capacitor time constant. The part continues to cycle in this manner until the fault condition is removed. The time between retries is given in Equation 6.

$$T_{BR} = -R_{FAULT} \times C_{RETRY} \times LN\,(1 - V_{EN} / (V_{IN} - V_{OL})) + T_{FAULT}$$

where

- V_{EN} is the EN pin typical threshold voltage
- V_{IN} is the input voltage
- V_{OL} is the $\overline{FAULT}$ pin typical saturation voltage
- T_{FAULT} is the internal $\overline{FAULT}$ typical deglitch time (6)

The retry duty cycle is calculated with Equation 7, and the average current is $D \times I_{OS}$.

$$D = T_{FAULT} / (T_{FAULT} + T_{BR}) \quad (7)$$

Copyright © 2009–2016, Texas Instruments Incorporated

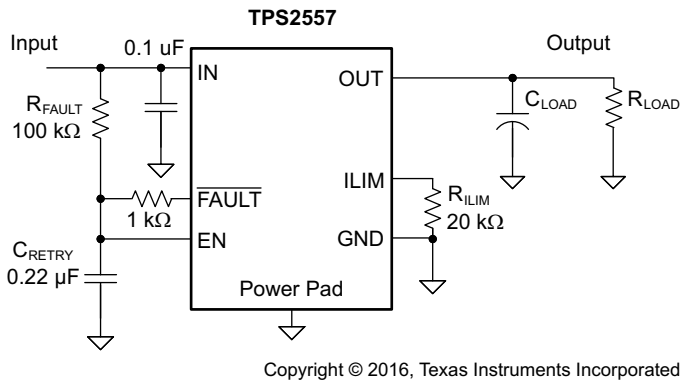

Figure 20. Auto-Retry Functionality

Some applications require auto-retry functionality and the ability to enable and disable with an external logic signal. The figure below shows how an external logic signal can drive EN through R_{FAULT} and maintain auto-retry functionality. The resistor and capacitor time constant determines the auto-retry time-out period.

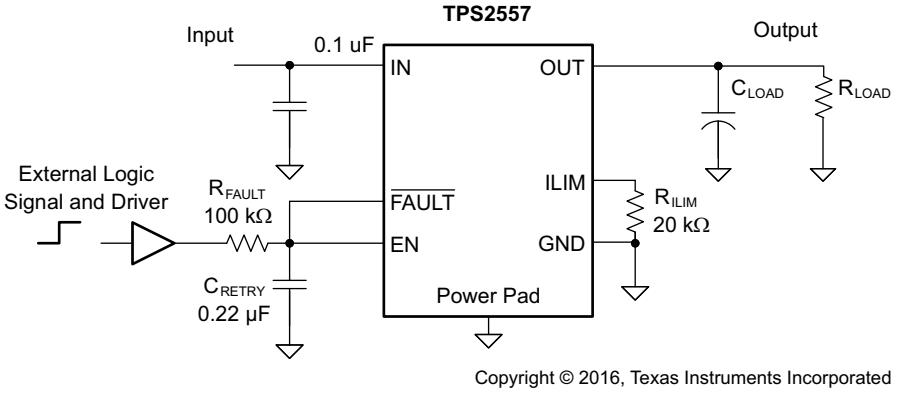

Figure 21. Auto-Retry Functionality With External EN Signal

10.2.1.2.4 Two-Level Current-Limit Circuit

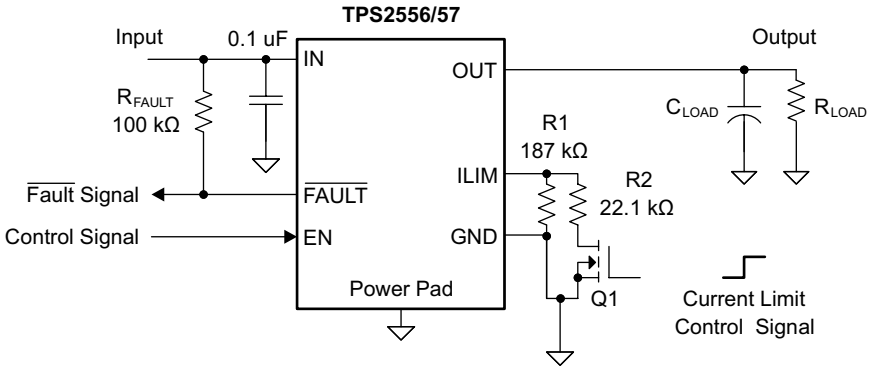

Copyright © 2016, Texas Instruments Incorporated

Figure 22. Two-Level Current-Limit Circuit

Some applications require different current-limit thresholds depending on external system conditions. Figure 22 shows an implementation for an externally-controlled, two-level current-limit circuit. The current-limit threshold is set by the total resistance from ILIM to GND (see *Programming the Current-Limit Threshold*). A logic-level input enables and disables MOSFET Q1 and changes the current-limit threshold by modifying the total resistance from ILIM to GND. Additional MOSFET and resistor combinations can be used in parallel to Q1 and R2 to increase the number of additional current-limit levels.

NOTE

ILIM must never be driven directly with an external signal.

10.2.1.3 Application Curve

In Figure 23, the load current setpoint is 5.05 A, as programmed by the 22.1-kΩ resistor. Load current is stepped mildly from approximately 4.9 A to 5.2 A. The internal $\overline{\text{FAULT}}$ timer runs and after 9 ms, $\overline{\text{FAULT}}$ goes low and current continues to be regulated at approximately 5 A. Due to the high power dissipation within the device, thermal cycling occurs.

In Figure 24, the load current setpoint is 597 mA, as programmed by the 187-kΩ resistor. Load current is stepped mildly from approximately 560 mA to 620 mA. The internal $\overline{\text{FAULT}}$ timer runs and after 9 ms, $\overline{\text{FAULT}}$ goes low and current continues to be regulated at approximately 580 mA.

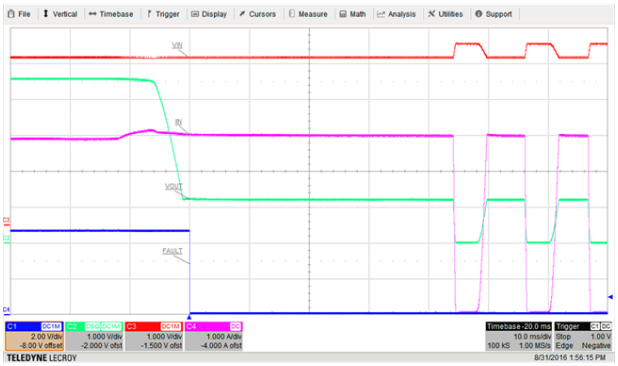

Figure 23. 5-A Current Limit With Thermal Cycling

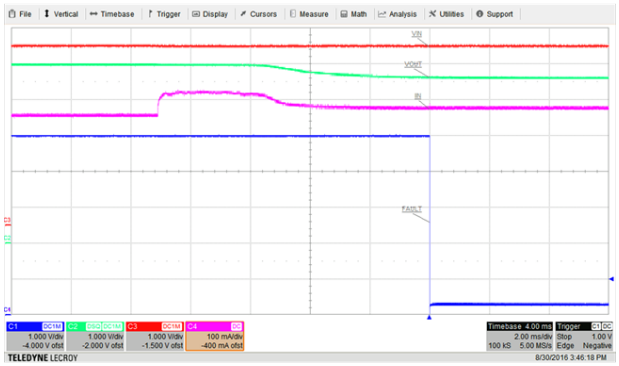

Figure 24. 600-mA Current Limit Without Thermal Cycling

11 Power Supply Recommendations

The TPS255x operates from 2.5 V to 6.5 V. TI recommends operating from either a 3.3-V ± 10% or 5-V ± 10% power supply. The load capacity of the power supply must be greater than the maximum current limit (I_{OS}) setting of the TPS255x.

Copyright © 2009–2016, Texas Instruments Incorporated

12 Layout

12.1 Layout Guidelines

- TI recommends placing the 100-nF bypass capacitor near the IN and GND pins, and make the connections using a low-inductance trace.
- TI recommends placing a high-value electrolytic capacitor and a 100-nF bypass capacitor on the output pin when large transient currents are expected on the output.
- The traces routing the R_{ILIM} resistor to the device must be as short as possible to reduce parasitic effects on the current limit accuracy.
- The PowerPAD must be directly connected to PCB ground plane using wide and short copper trace.

12.2 Layout Example

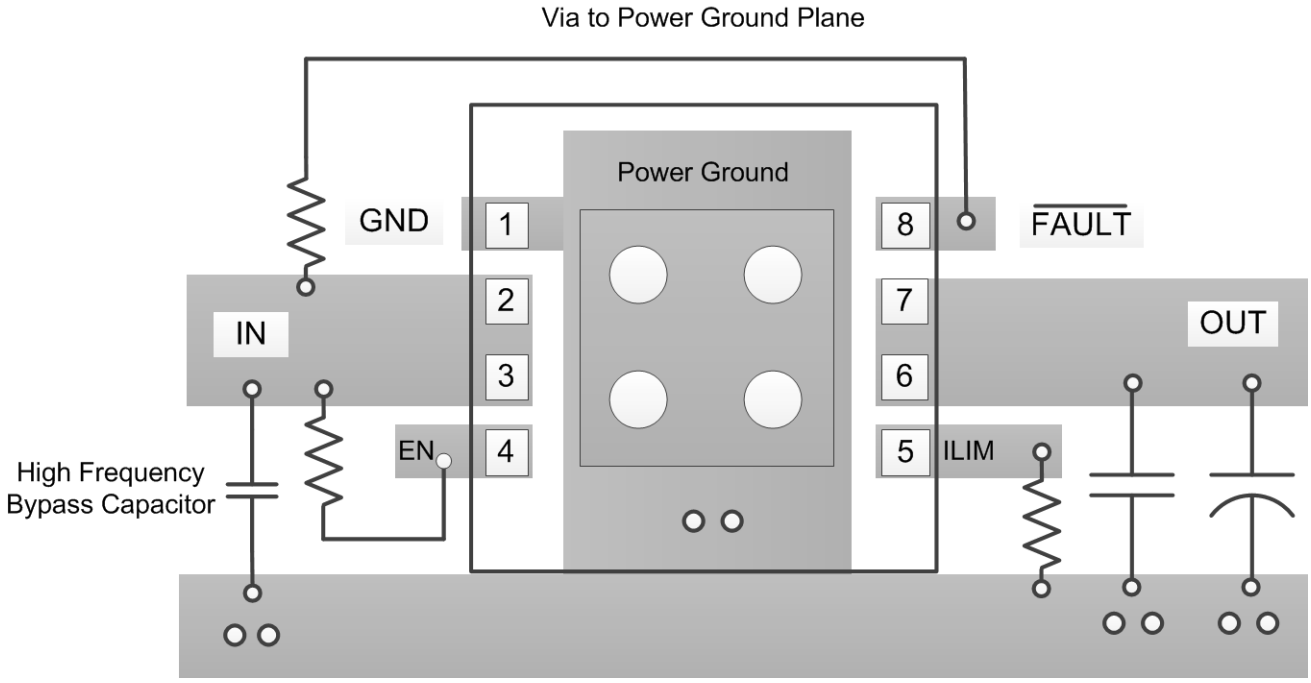

Figure 25. TPS255x Layout Example

12.3 Thermal Considerations

The low on-resistance of the N-channel MOSFET allows small surface-mount packages to pass large currents. It is good design practice to estimate power dissipation and junction temperature. This analysis gives an approximation for calculating junction temperature based on the power dissipation in the package. However, thermal analysis is strongly dependent on additional system level factors. Such factors include air flow, board layout, copper thickness and surface area, and proximity to other devices dissipating power. Good thermal design practice must include all system level factors in addition to individual component analysis.

Begin by determining the $r_{DS(ON)}$ of the N-channel MOSFET relative to the input voltage and operating temperature. As an initial estimate, use the highest operating ambient temperature of interest and read $r_{DS(ON)}$ from the typical characteristics graph. Using this value, the power dissipation can be calculated by Equation 8.

$$P_D = r_{DS(ON)} \times I_{OUT}^2$$

where

- P_D = Total power dissipation (W)
- $r_{DS(ON)}$ = Power switch on-resistance (Ω)
- I_{OUT} = Maximum current-limit threshold (A) (8)

Finally, calculate the junction temperature with Equation 9.

$$T_J = P_D \times R_{\theta JA} + T_A$$

where

- T_A = Ambient temperature (°C)
- $R_{\theta JA}$ = Thermal resistance (°C/W)
- P_D = Total power dissipation (W) (9)

Compare the calculated junction temperature with the initial estimate. If they are not within a few degrees, repeat the calculation using the *refined* $r_{DS(ON)}$ from the previous calculation as the new estimate. Two or three iterations are generally sufficient to achieve the desired result. The final junction temperature is highly dependent on thermal resistance, and thermal resistance is highly dependent on the individual package and board layout.

Copyright © 2009–2016, Texas Instruments Incorporated

13 Device and Documentation Support

13.1 Related Links

The table below lists quick access links. Categories include technical documents, support and community resources, tools and software, and quick access to sample or buy.

Table 3. Related Links

PARTS	PRODUCT FOLDER	SAMPLE & BUY	TECHNICAL DOCUMENTS	TOOLS & SOFTWARE	SUPPORT & COMMUNITY
TPS2556	Click here	Click here	Click here	Click here	Click here
TPS2557	Click here	Click here	Click here	Click here	Click here

13.2 Receiving Notification of Documentation Updates

To receive notification of documentation updates, navigate to the device product folder on ti.com. In the upper right corner, click on *Alert me* to register and receive a weekly digest of any product information that has changed. For change details, review the revision history included in any revised document.

13.3 Community Resources

The following links connect to TI community resources. Linked contents are provided "AS IS" by the respective contributors. They do not constitute TI specifications and do not necessarily reflect TI's views; see TI's Terms of Use.

TI E2E™ Online Community ***TI's Engineer-to-Engineer (E2E) Community.*** Created to foster collaboration among engineers. At e2e.ti.com, you can ask questions, share knowledge, explore ideas and help solve problems with fellow engineers.

Design Support ***TI's Design Support*** Quickly find helpful E2E forums along with design support tools and contact information for technical support.

13.4 Trademarks

PowerPAD, E2E are trademarks of Texas Instruments.
All other trademarks are the property of their respective owners.

13.5 Electrostatic Discharge Caution

These devices have limited built-in ESD protection. The leads should be shorted together or the device placed in conductive foam during storage or handling to prevent electrostatic damage to the MOS gates.

13.6 Glossary

SLYZ022 — *TI Glossary*.

This glossary lists and explains terms, acronyms, and definitions.

14 Mechanical, Packaging, and Orderable Information

The following pages include mechanical, packaging, and orderable information. This information is the most current data available for the designated devices. This data is subject to change without notice and revision of this document. For browser-based versions of this data sheet, refer to the left-hand navigation.

PACKAGING INFORMATION

Orderable part number	Status (1)	Material type (2)	Package | Pins	Package qty | Carrier	RoHS (3)	Lead finish/ Ball material (4)	MSL rating/ Peak reflow (5)	Op temp (°C)	Part marking (6)
TPS2556DRBR	Active	Production	SON (DRB) | 8	3000 | LARGE T&R	Yes	NIPDAU	Level-2-260C-1 YEAR	-40 to 125	2556
TPS2556DRBR.A	Active	Production	SON (DRB) | 8	3000 | LARGE T&R	Yes	NIPDAU	Level-2-260C-1 YEAR	-40 to 125	2556
TPS2556DRBR.B	Active	Production	SON (DRB) | 8	3000 | LARGE T&R	Yes	NIPDAU	Level-2-260C-1 YEAR	-40 to 125	2556
TPS2556DRBRG4	Active	Production	SON (DRB) | 8	3000 | LARGE T&R	Yes	NIPDAU	Level-2-260C-1 YEAR	-40 to 125	2556
TPS2556DRBRG4.A	Active	Production	SON (DRB) | 8	3000 | LARGE T&R	Yes	NIPDAU	Level-2-260C-1 YEAR	-40 to 125	2556
TPS2556DRBRG4.B	Active	Production	SON (DRB) | 8	3000 | LARGE T&R	Yes	NIPDAU	Level-2-260C-1 YEAR	-40 to 125	2556
TPS2556DRBT	Active	Production	SON (DRB) | 8	250 | SMALL T&R	Yes	NIPDAU	Level-2-260C-1 YEAR	-40 to 125	2556
TPS2556DRBT.A	Active	Production	SON (DRB) | 8	250 | SMALL T&R	Yes	NIPDAU	Level-2-260C-1 YEAR	-40 to 125	2556
TPS2556DRBT.B	Active	Production	SON (DRB) | 8	250 | SMALL T&R	Yes	NIPDAU	Level-2-260C-1 YEAR	-40 to 125	2556
TPS2557DRBR	Active	Production	SON (DRB) | 8	3000 | LARGE T&R	Yes	NIPDAU	Level-2-260C-1 YEAR	-40 to 125	2557
TPS2557DRBR.A	Active	Production	SON (DRB) | 8	3000 | LARGE T&R	Yes	NIPDAU	Level-2-260C-1 YEAR	-40 to 125	2557
TPS2557DRBR.B	Active	Production	SON (DRB) | 8	3000 | LARGE T&R	Yes	NIPDAU	Level-2-260C-1 YEAR	-40 to 125	2557
TPS2557DRBRG4	Active	Production	SON (DRB) | 8	3000 | LARGE T&R	Yes	NIPDAU	Level-2-260C-1 YEAR	-40 to 125	2557
TPS2557DRBRG4.A	Active	Production	SON (DRB) | 8	3000 | LARGE T&R	Yes	NIPDAU	Level-2-260C-1 YEAR	-40 to 125	2557
TPS2557DRBRG4.B	Active	Production	SON (DRB) | 8	3000 | LARGE T&R	Yes	NIPDAU	Level-2-260C-1 YEAR	-40 to 125	2557
TPS2557DRBT	Active	Production	SON (DRB) | 8	250 | SMALL T&R	Yes	NIPDAU	Level-2-260C-1 YEAR	-40 to 125	2557
TPS2557DRBT.A	Active	Production	SON (DRB) | 8	250 | SMALL T&R	Yes	NIPDAU	Level-2-260C-1 YEAR	-40 to 125	2557
TPS2557DRBT.B	Active	Production	SON (DRB) | 8	250 | SMALL T&R	Yes	NIPDAU	Level-2-260C-1 YEAR	-40 to 125	2557

(1) **Status:** For more details on status, see our product life cycle.

(2) **Material type:** When designated, preproduction parts are prototypes/experimental devices, and are not yet approved or released for full production. Testing and final process, including without limitation quality assurance, reliability performance testing, and/or process qualification, may not yet be complete, and this item is subject to further changes or possible discontinuation. If available for ordering, purchases will be subject to an additional waiver at checkout, and are intended for early internal evaluation purposes only. These items are sold without warranties of any kind.

(3) **RoHS values:** Yes, No, RoHS Exempt. See the TI RoHS Statement for additional information and value definition.

(4) **Lead finish/Ball material:** Parts may have multiple material finish options. Finish options are separated by a vertical ruled line. Lead finish/Ball material values may wrap to two lines if the finish value exceeds the maximum column width.

(5) **MSL rating/Peak reflow:** The moisture sensitivity level ratings and peak solder (reflow) temperatures. In the event that a part has multiple moisture sensitivity ratings, only the lowest level per JEDEC standards is shown. Refer to the shipping label for the actual reflow temperature that will be used to mount the part to the printed circuit board.

(6) **Part marking:** There may be an additional marking, which relates to the logo, the lot trace code information, or the environmental category of the part.

Multiple part markings will be inside parentheses. Only one part marking contained in parentheses and separated by a "~" will appear on a part. If a line is indented then it is a continuation of the previous line and the two combined represent the entire part marking for that device.

Important Information and Disclaimer: The information provided on this page represents TI's knowledge and belief as of the date that it is provided. TI bases its knowledge and belief on information provided by third parties, and makes no representation or warranty as to the accuracy of such information. Efforts are underway to better integrate information from third parties. TI has taken and continues to take reasonable steps to provide representative and accurate information but may not have conducted destructive testing or chemical analysis on incoming materials and chemicals. TI and TI suppliers consider certain information to be proprietary, and thus CAS numbers and other limited information may not be available for release.

In no event shall TI's liability arising out of such information exceed the total purchase price of the TI part(s) at issue in this document sold by TI to Customer on an annual basis.

OTHER QUALIFIED VERSIONS OF TPS2556, TPS2557 :

- Automotive : TPS2556-Q1, TPS2557-Q1

NOTE: Qualified Version Definitions:

- Automotive - Q100 devices qualified for high-reliability automotive applications targeting zero defects

TAPE AND REEL INFORMATION

REEL DIMENSIONS

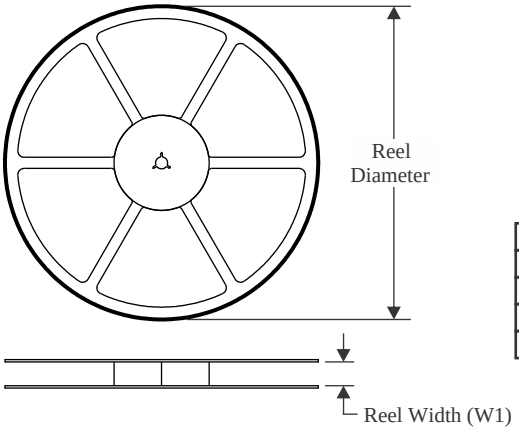

TAPE DIMENSIONS

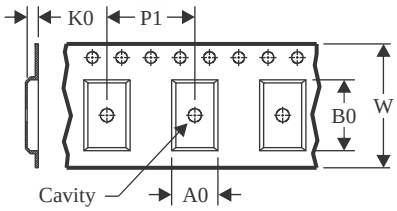

A0	Dimension designed to accommodate the component width
B0	Dimension designed to accommodate the component length
K0	Dimension designed to accommodate the component thickness
W	Overall width of the carrier tape
P1	Pitch between successive cavity centers

QUADRANT ASSIGNMENTS FOR PIN 1 ORIENTATION IN TAPE

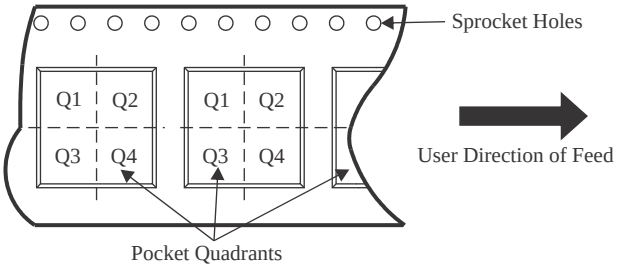

*All dimensions are nominal

Device	Package Type	Package Drawing	Pins	SPQ	Reel Diameter (mm)	Reel Width W1 (mm)	A0 (mm)	B0 (mm)	K0 (mm)	P1 (mm)	W (mm)	Pin1 Quadrant
TPS2556DRBR	SON	DRB	8	3000	330.0	12.4	3.3	3.3	1.1	8.0	12.0	Q2
TPS2556DRBRG4	SON	DRB	8	3000	330.0	12.4	3.3	3.3	1.1	8.0	12.0	Q2
TPS2556DRBT	SON	DRB	8	250	180.0	12.4	3.3	3.3	1.1	8.0	12.0	Q2
TPS2557DRBR	SON	DRB	8	3000	330.0	12.4	3.3	3.3	1.1	8.0	12.0	Q2
TPS2557DRBRG4	SON	DRB	8	3000	330.0	12.4	3.3	3.3	1.1	8.0	12.0	Q2
TPS2557DRBT	SON	DRB	8	250	180.0	12.4	3.3	3.3	1.1	8.0	12.0	Q2

TAPE AND REEL BOX DIMENSIONS

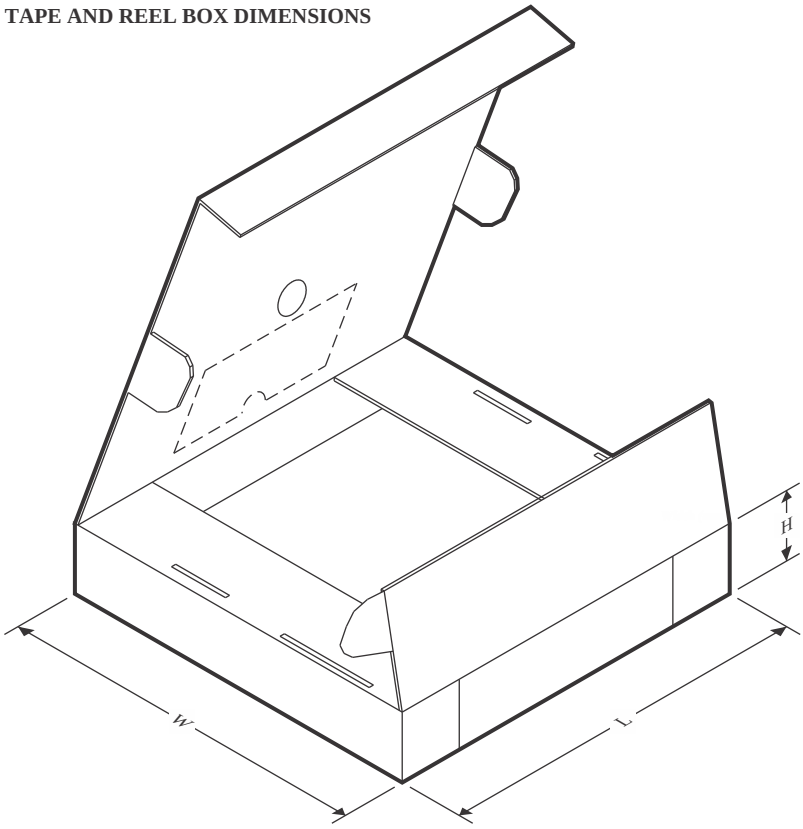

*All dimensions are nominal

Device	Package Type	Package Drawing	Pins	SPQ	Length (mm)	Width (mm)	Height (mm)
TPS2556DRBR	SON	DRB	8	3000	346.0	346.0	33.0
TPS2556DRBRG4	SON	DRB	8	3000	346.0	346.0	33.0
TPS2556DRBT	SON	DRB	8	250	210.0	185.0	35.0
TPS2557DRBR	SON	DRB	8	3000	346.0	346.0	33.0
TPS2557DRBRG4	SON	DRB	8	3000	346.0	346.0	33.0
TPS2557DRBT	SON	DRB	8	250	210.0	185.0	35.0

GENERIC PACKAGE VIEW

DRB 8 VSON - 1 mm max height

PLASTIC SMALL OUTLINE - NO LEAD

Images above are just a representation of the package family, actual package may vary.
Refer to the product data sheet for package details.

4203482/L

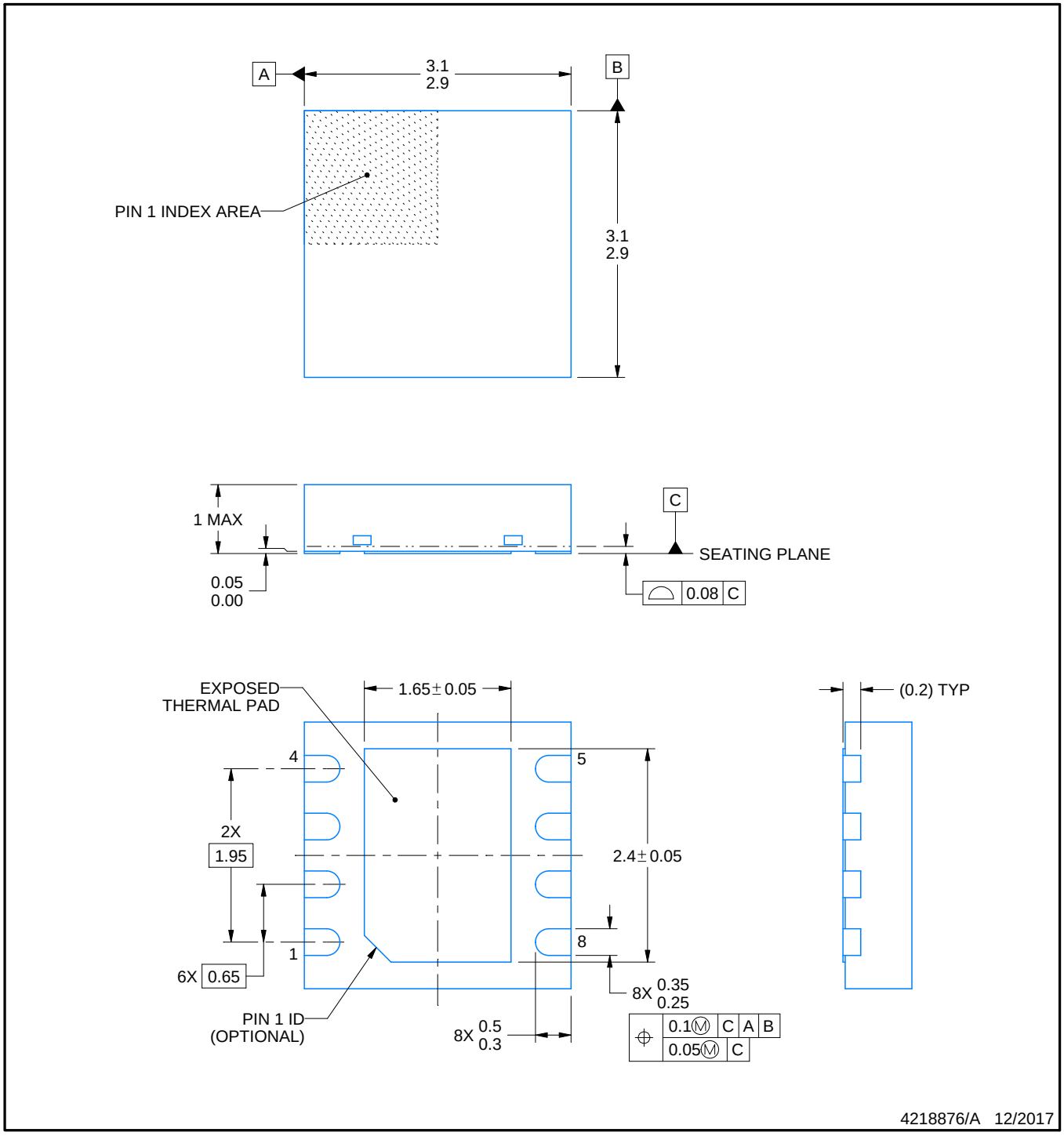

NOTES:

1. All linear dimensions are in millimeters. Any dimensions in parenthesis are for reference only. Dimensioning and tolerancing per ASME Y14.5M.
2. This drawing is subject to change without notice.
3. The package thermal pad must be soldered to the printed circuit board for thermal and mechanical performance.

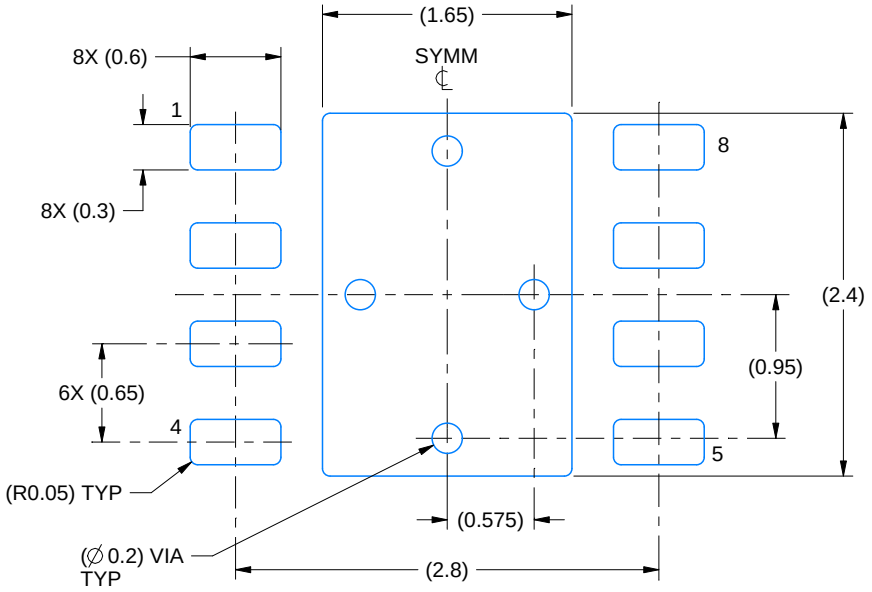

LAND PATTERN EXAMPLE
SCALE:20X

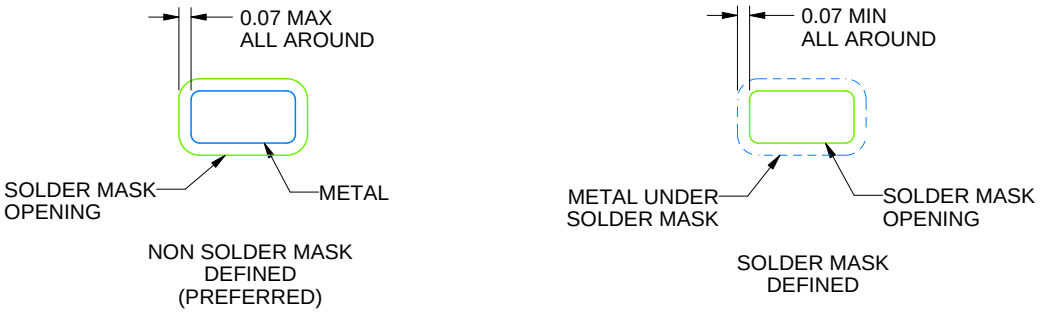

SOLDER MASK DETAILS

4218876/A 12/2017

NOTES: (continued)

4. This package is designed to be soldered to a thermal pad on the board. For more information, see Texas Instruments literature number SLUA271 (www.ti.com/lit/slua271).
5. Vias are optional depending on application, refer to device data sheet. If any vias are implemented, refer to their locations shown on this view. It is recommended that vias under paste be filled, plugged or tented.

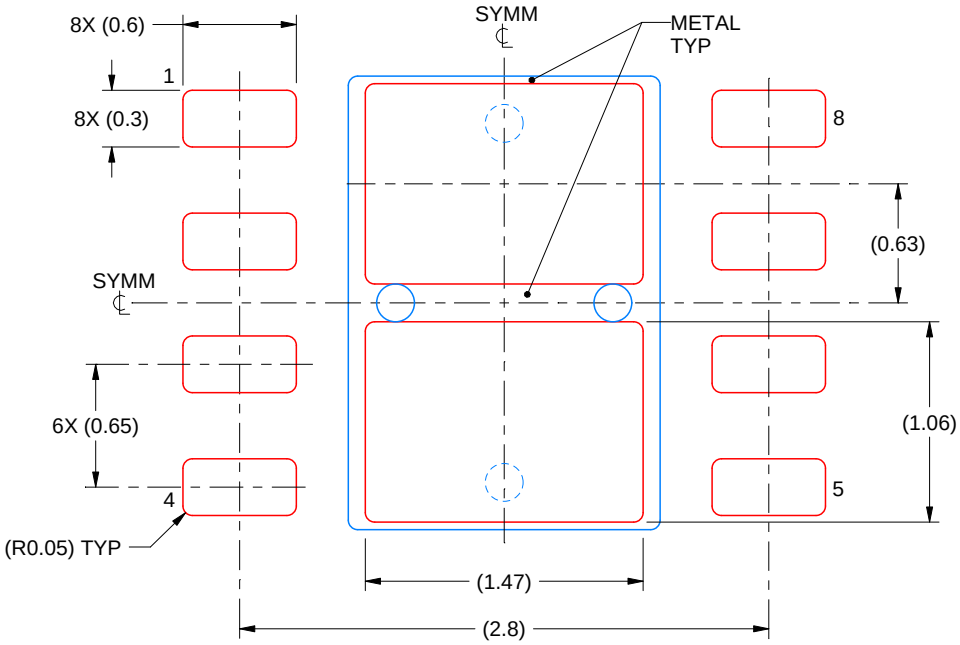

SOLDER PASTE EXAMPLE
BASED ON 0.125 mm THICK STENCIL

EXPOSED PAD
81% PRINTED SOLDER COVERAGE BY AREA
SCALE:25X

4218876/A 12/2017

NOTES: (continued)

6. Laser cutting apertures with trapezoidal walls and rounded corners may offer better paste release. IPC-7525 may have alternate design recommendations.

IMPORTANT NOTICE AND DISCLAIMER

TI PROVIDES TECHNICAL AND RELIABILITY DATA (INCLUDING DATASHEETS), DESIGN RESOURCES (INCLUDING REFERENCE DESIGNS), APPLICATION OR OTHER DESIGN ADVICE, WEB TOOLS, SAFETY INFORMATION, AND OTHER RESOURCES “AS IS” AND WITH ALL FAULTS, AND DISCLAIMS ALL WARRANTIES, EXPRESS AND IMPLIED, INCLUDING WITHOUT LIMITATION ANY IMPLIED WARRANTIES OF MERCHANTABILITY, FITNESS FOR A PARTICULAR PURPOSE OR NON-INFRINGEMENT OF THIRD PARTY INTELLECTUAL PROPERTY RIGHTS.

These resources are intended for skilled developers designing with TI products. You are solely responsible for (1) selecting the appropriate TI products for your application, (2) designing, validating and testing your application, and (3) ensuring your application meets applicable standards, and any other safety, security, regulatory or other requirements.

These resources are subject to change without notice. TI grants you permission to use these resources only for development of an application that uses the TI products described in the resource. Other reproduction and display of these resources is prohibited. No license is granted to any other TI intellectual property right or to any third party intellectual property right. TI disclaims responsibility for, and you fully indemnify TI and its representatives against any claims, damages, costs, losses, and liabilities arising out of your use of these resources.

TI’s products are provided subject to TI’s Terms of Sale, TI’s General Quality Guidelines, or other applicable terms available either on ti.com or provided in conjunction with such TI products. TI’s provision of these resources does not expand or otherwise alter TI’s applicable warranties or warranty disclaimers for TI products. Unless TI explicitly designates a product as custom or customer-specified, TI products are standard, catalog, general purpose devices.

TI objects to and rejects any additional or different terms you may propose.

Copyright © 2025, Texas Instruments Incorporated

Last updated 10/2025